2017+ HONDA RIDGELINE
MX4 TS

INSTALLATION SHEET

Any damaged or missing parts?

Parts will be shipped to you directly.
Call 818-365-9000 Mon - Fri 8:30 am - 6:00 pm EST
or email support@bakindustries.com

TOOLS REQUIRED

- Scissors or utility knife
- Isopropyl alcohol
- 1/2″ Wrench or socket
- Phillips screwdriver
- 5/8″ Drill bit & drill
- T-50 Torx drive
- 3/16″ Hex wrench
- 1/8″ Allen wrench
- T-30 Torx drive

NOTE: It is important that all areas where the bed cover mounts are clean and free of debris prior to installing.

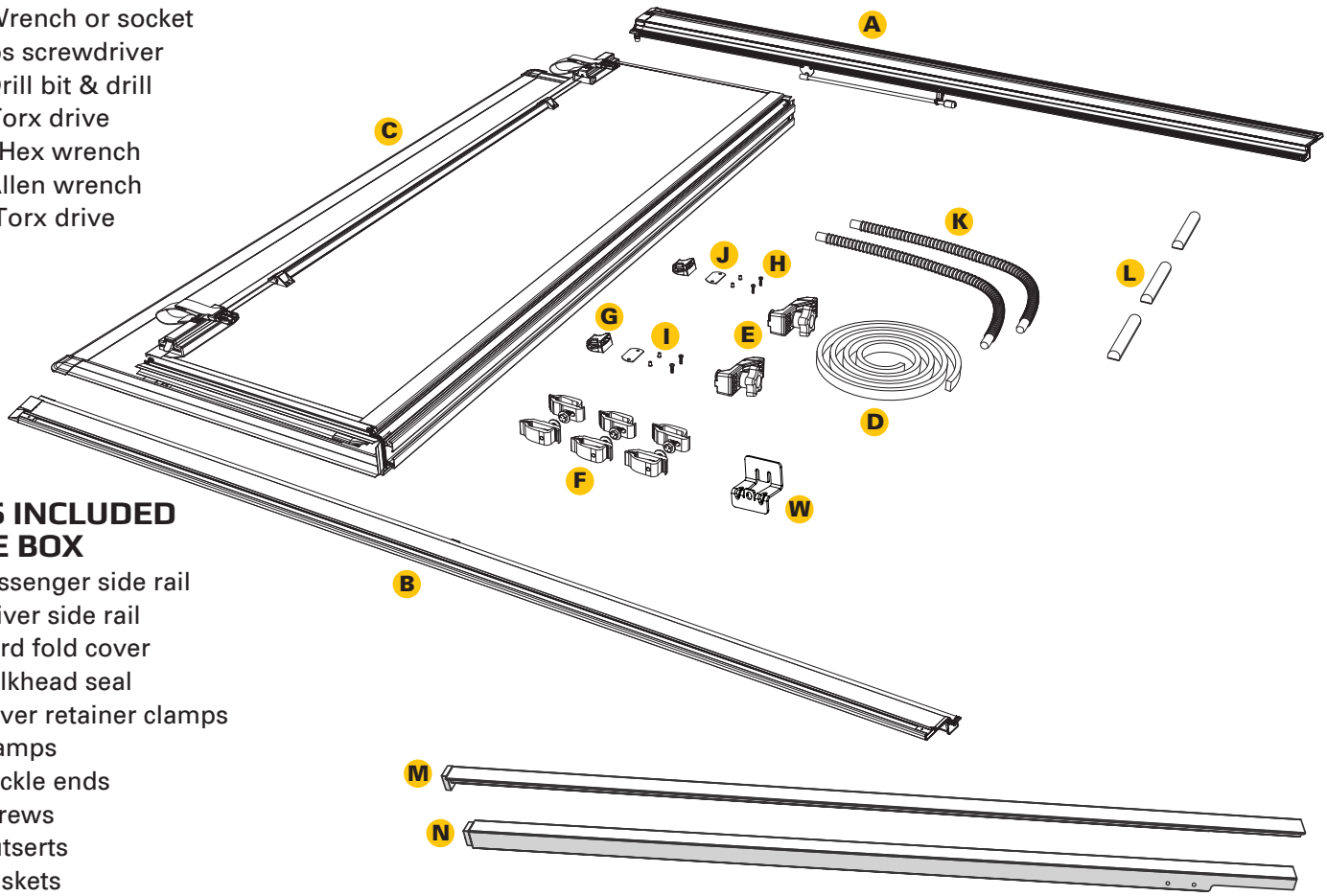

PARTS INCLUDED IN THE BOX

- **A** 1x Passenger side rail
- **B** 1x Driver side rail
- **C** 1x Hard fold cover
- **D** 1x Bulkhead seal
- **E** 2x Cover retainer clamps
- **F** 6x Clamps
- **G** 2x Buckle ends
- **H** 4x Screws
- **I** 4x Nutserts
- **J** 2x Gaskets
- **K** 2x Drain tubes
- **L** 3x D-shaped cab bumpers
- **M** 1x Driver side mounting rail
- **N** 1x Passenger side mounting rail
- **O** 6x Rail brackets
- **P** 2x Cab brackets
- **Q** 6x Tap plates
- **R** 12x Socket head screws
- **S** 1x Driver side rear bracket
- **T** 1x Passenger side rear bracket
- **U** 1x Driver side rail end corner
- **V** 1x Passenger side rail end corner
- **W** 1x Center rail bracket

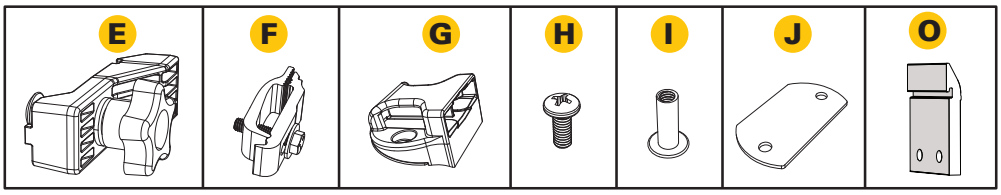

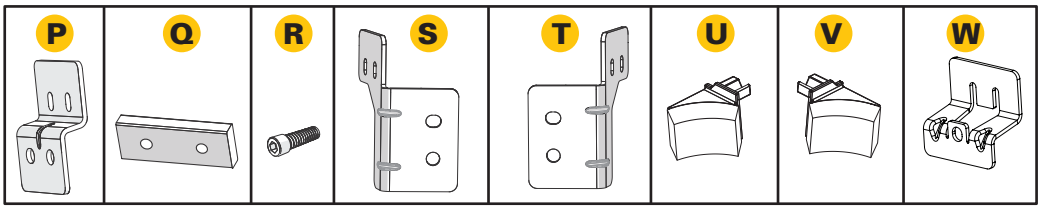

1 Remove the 2 upper tie-down hooks, using a T-50 Torx wrench. Keep the 4 Torx screws and tie down hooks for later re-installation. In addition, remove the middle factory bolt using a T-30 torx wrench and keep for later installation.

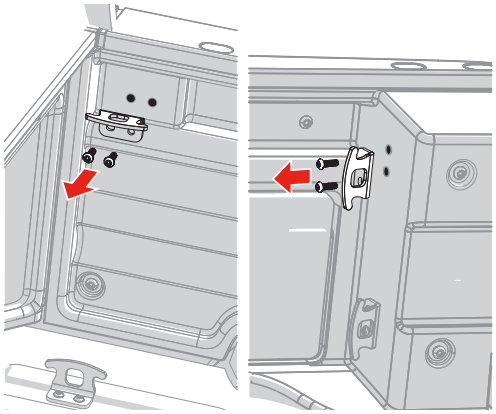

Middle Factory Bolt

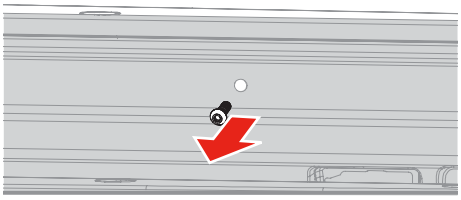

2 Slide three of the rail brackets (O) into the passenger side mounting rail (N). Align with the rail interior profile as shown.

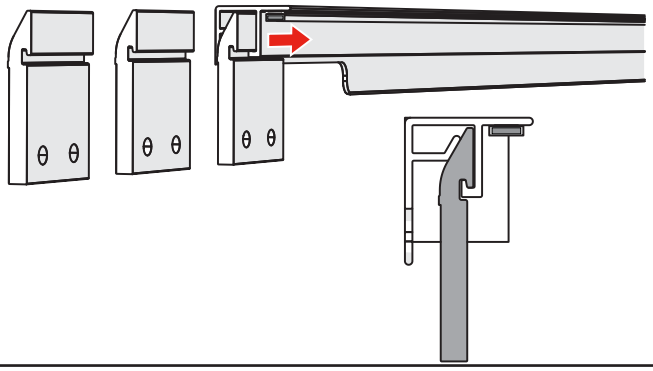

3 Slide one rail bracket (O) toward the cab, leave one in the middle that will align with the middle factory bolt hole and leave the other at the tailgate end of the passenger side mounting rail (N).

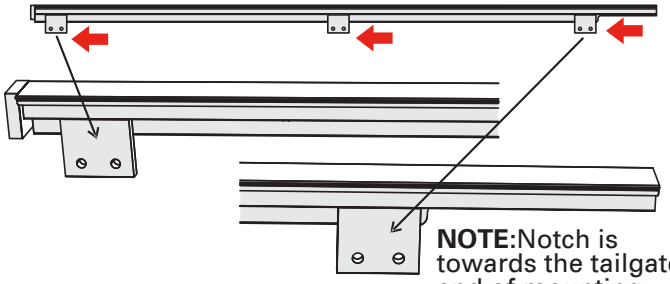

NOTE: Notch is towards the tailgate end of mounting rail.

4 Assemble the cab bracket (P), passenger-side rear bracket (T), and center bracket (W) to the passenger-side mounting rail (N) using the tap plates (Q) and socket head screws (R) as shown. Loosely tighten the socket head screws with a 3/16" hex wrench

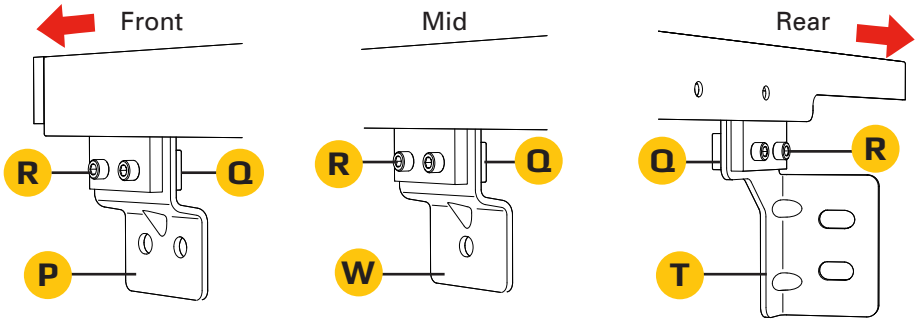

If the rail is not seated properly on the bed cap and a gap is visible between the rail and the truck bed, try the following bracket orientation:

Position the Passenger Side Bracket (T) in front of the Rail Bracket (O).

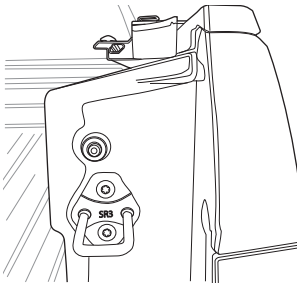

Place the Tap Plate (Q) behind both brackets. This configuration should allow the rail to sit flush against the bed, eliminating the gap.

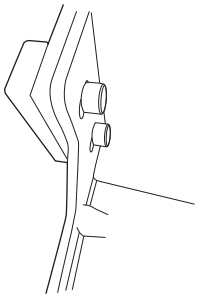

5 Place the passenger-side mounting rail (N) on the truck, positioning it so the front cap pad is firmly against the bulkhead. Align the front and rear brackets with the factory tie-down hook bolt holes, and align the center bracket with the factory bolt hole. Reinstall the tie-down hooks and Torx screws from Step 1, tightening them with a T-50 Torx wrench. Then reinstall the factory bolt in the center and tighten it with a T-30 Torx wrench

NOTE: When reinstalling the front tie-down hook, make sure it faces upside down from how it was removed. Next, tighten the front and rear socket head screws (R) with the 3/16" hex wrench. While tightening the front socket head screws, make sure to push down on the rail to make a good seal contact with the truck bed, while at the same time push the rail forward to keep good contact between the cap pad and the bulkhead. Continue to push down on the rail while tightening the rear socket head screws and the middle socket head screws. Repeat steps 1-5 on the driver side with the driver side mounting rail (M) and driver side rear bracket (S).

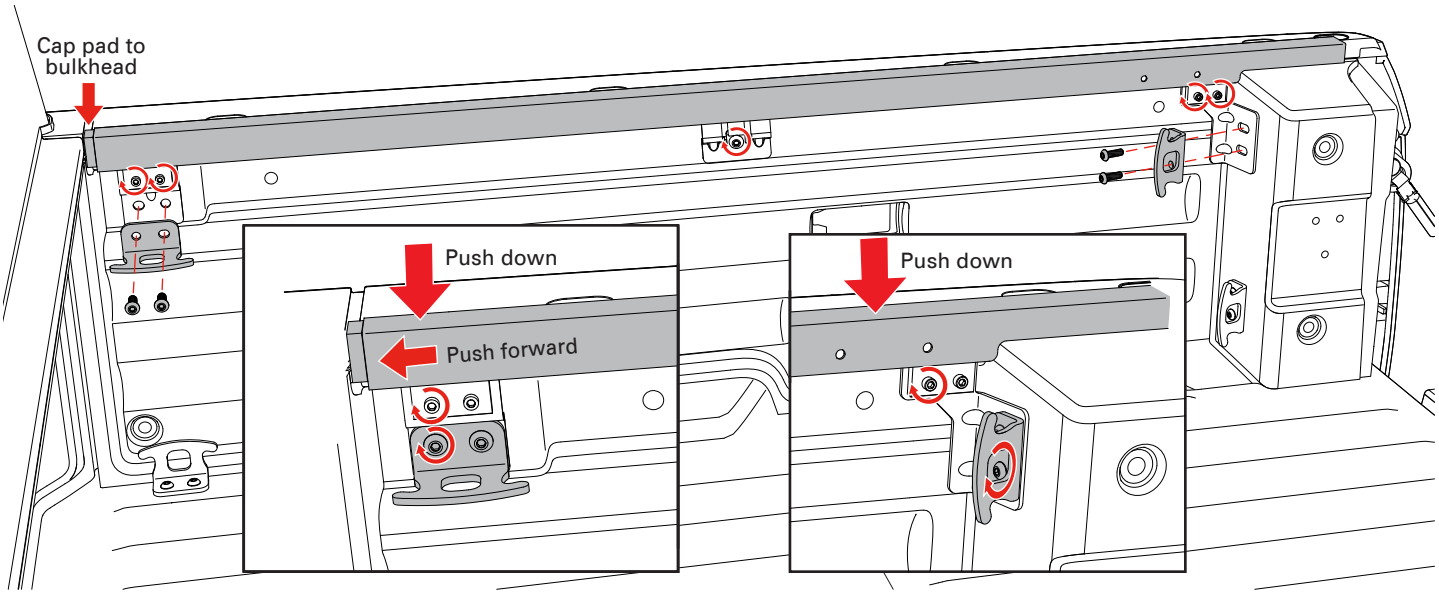

6 Insert the passenger rail end corner (V) Into the tailgate end of the passenger side mounting rail (N). Do this also on the driver side withVthe driver side mounting rail (M) and the driver rail end corner (U).

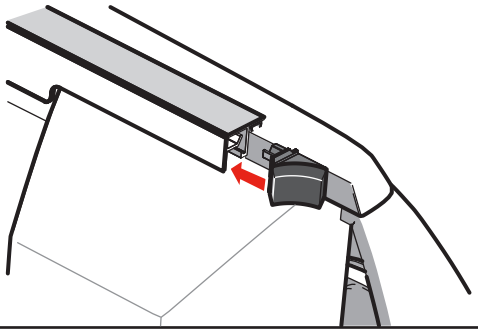

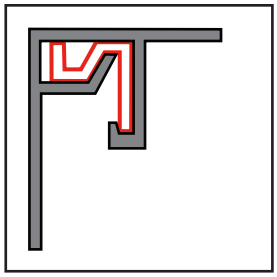

7 If the truck has a drop-in bedliner, no seal will be needed. Clean the top of the bulkhead with soap and water to remove debris. Clean the area with isopropyl alcohol to remove wax or grease and to any remaining water. Allow the surface to dry. Peel the backing and adhere the seal (D) from one bulkhead edge to the other. It should be positioned along the back edge of the bulkhead as shown. Remove any excess with scissors or a utility knife. Apply pressure evenly to the entire seal to ensure proper adhesion.

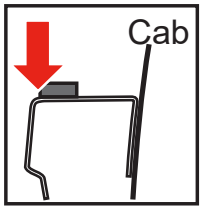

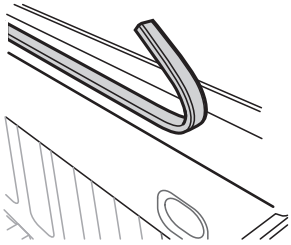

8 Attach the drain tubes (K) to the front of the side rails (A & B) to allow water to be diverted out of the truck bed via the rail. The opposite end of the drain tubes can be placed behind a bedliner, through the bed plugs, or by drilling a 5/8" hole in the bulkhead.

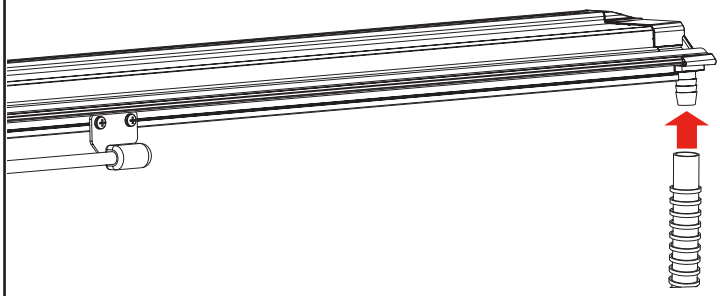

9 Place the passenger side rail (A) on to the passenger side mounting rail (N) installed in the previous steps. Position the side rail flush with the top edge of the mounting rail. The end of the side rail with the drain tube goes toward the cab of the truck.

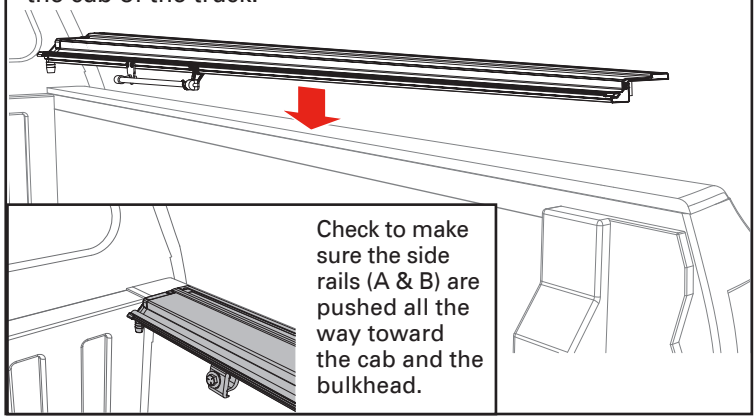

10 Attach three clamps (F) to the driver side rail (B) to the truck bed. Place the front clamp 6-8 inches from the bulkhead. Place the rear clamp as close to the tailgate as possible. Center the middle clamp accordingly. Clamps should be evenly spaced along the full length of the rail. Loosely tighten with a 1/2" wrench to make sure the clamps engage with the side rail.

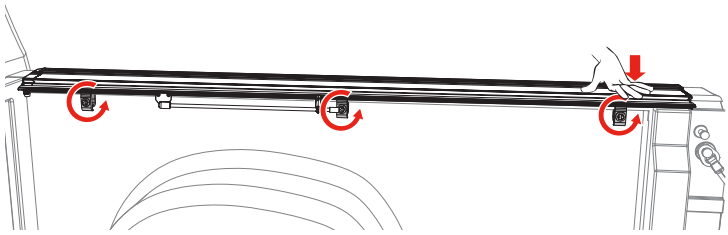

NOTE: *If the rails are leaning down, have one person stand on the outside of the bed and slightly roll the rails upward while another person slowly snugs the clamps up. If the clamps are tightened too quickly or overtightened, it will cause the rails to lean down.*

11 For the best cover (C) fit, the side rails (A & B) should be level with the truck bed cap and not angled up or down. Insert the backside of the clamp as high as possible and tighten the clamp. Tighten all clamps to 10 ft/lbs of torque with a 1/2" wrench or socket. **Caution: Do NOT overtighten!** **Repeat steps 8-10 on the opposite side with the driver's side rail (B).**

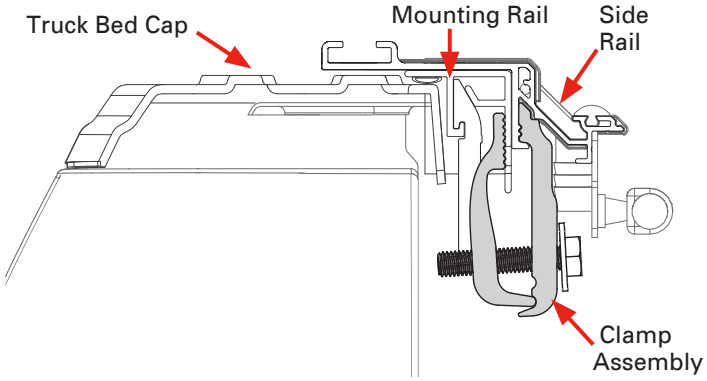

12 Before placing the cover (C) onto the vehicle, slide two cover retainer clamps (E) into the track on the underside of the cover (C) near the cab. Confirm the cover retainer clamps fit properly into the cover rail for optimum fit. Repeat on the opposite side of the cover.

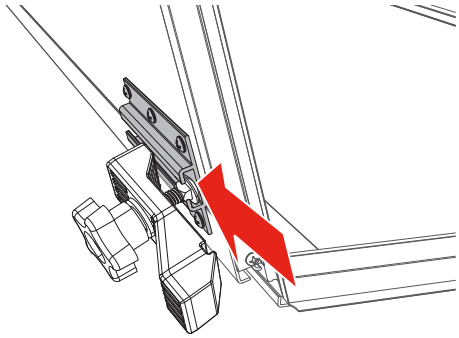

13 First, prep the buckle ends (G) by peeling off the adhesive liner of the gasket (J).

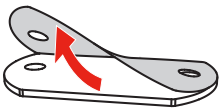

Then adhere the gasket to the underside of each of the buckle ends.

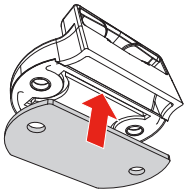

Position the buckle ends (G) with the open side facing the bed cover panel. Use a Phillips screwdriver to install the two buckles into the pre-drilled holes on the front header panel with the provided screws (H) and the nutsert (I) inserted from the backside of the panel. **DO NOT use a screw gun, securely tighten by hand only.**

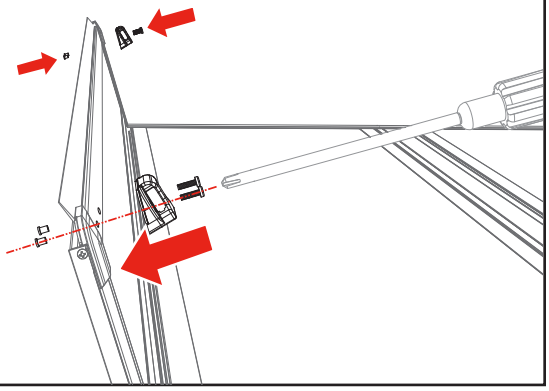

14 Set the cover (C) in the folded position on the side rails (A & B) towards the cab of the truck. Confirm the cover is evenly spaced between the rails.

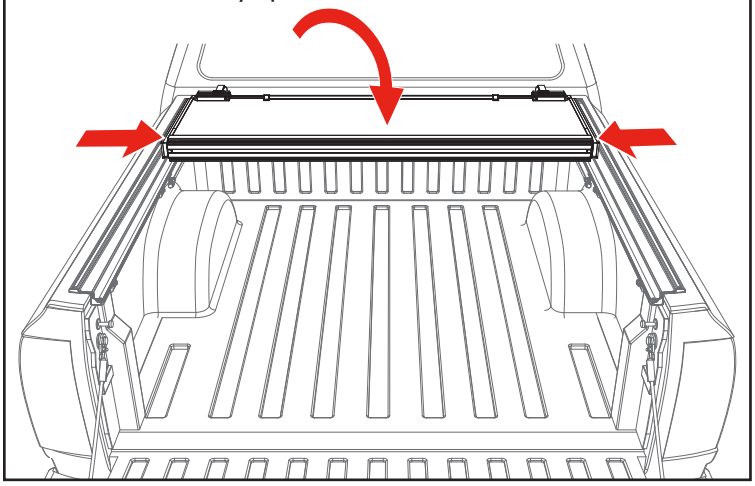

15 Confirm the retainer clamps (E) are positioned around the side rails (A & B) correctly as shown below. Tighten the retainer clamps by turning them clockwise until the lock washer is secure.

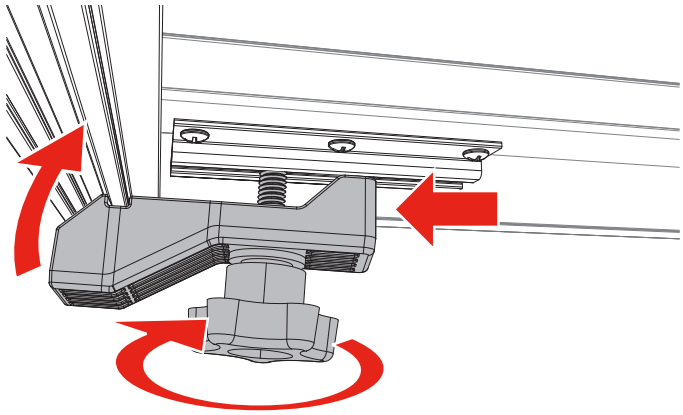

16 With the bed cover in the folded position, clean the area where the three D-shaped cab bumpers (L) or oversized bumpers (N) will go with soap and water to remove dirt and debris. Then clean the area with isopropyl alcohol to remove wax or grease and to evaporate any remaining water, allow the surface to dry. Then install the cab bumpers along the top edge of the cover where it meets the truck cab. Apply pressure to all bumpers to make sure the adhesion is good.

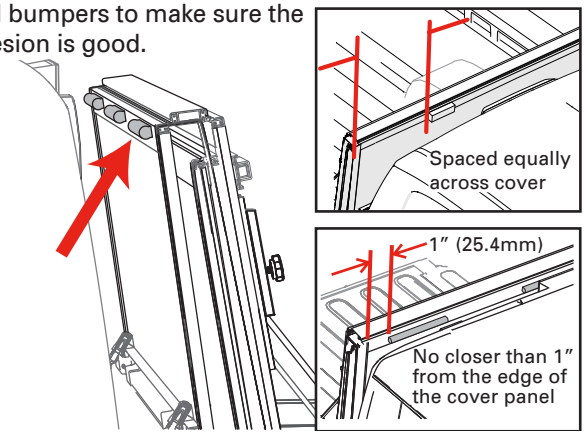

17 Unfold the cover (C) towards the tailgate. Then confirm each panel is centered side to side and front to back on the truck bed. If adjustments are needed, loosen the cover retainer clamps (E) and shift the cover until positioned correctly. The rear edge of the cover and tailgate seal should rest on top of the tailgate. For proper sealing, the tail panel will overlap by .5".

Power Tailgates: ***If your truck has a powered opening or closing tailgate ensure the tailgate functions properly with the cover closed and if needed adjust the cover towards the truck cab.***

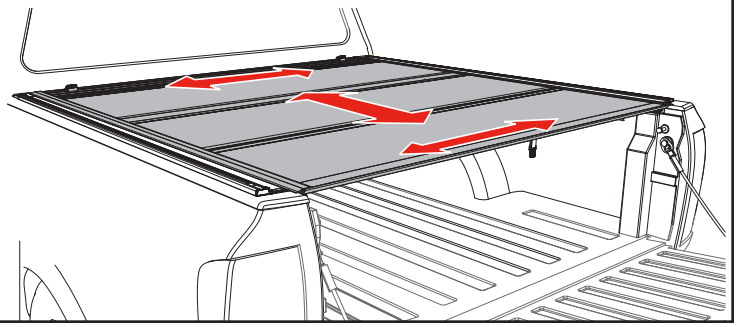

18 Check if the latches are hitting or not engaging the side rails (A & B) by releasing each latch. If any of the latches need modifications refer to the Slam Latch Adjustment section on the next page on how to make adjustments.

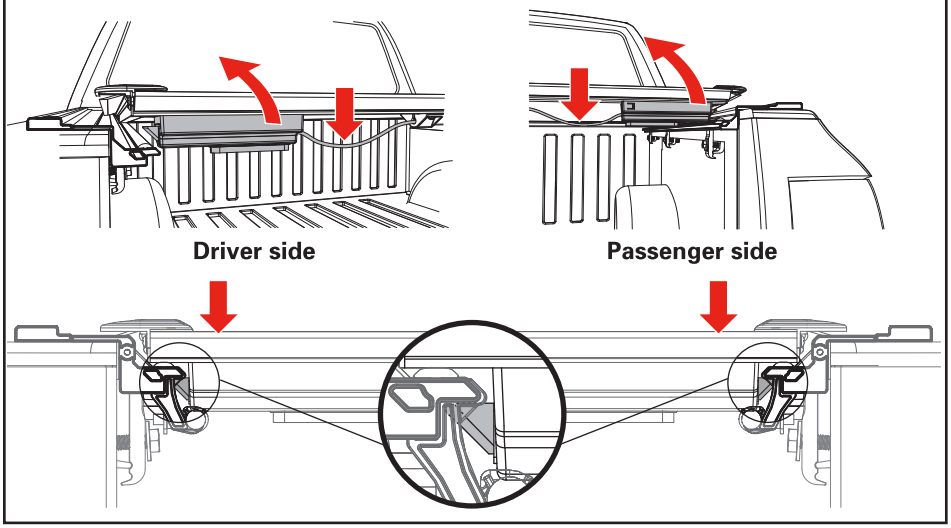

19 Retighten the cover retainer clamps (E) once the desired fitment is reached. **You are ready to drive with your cover in the closed position.**

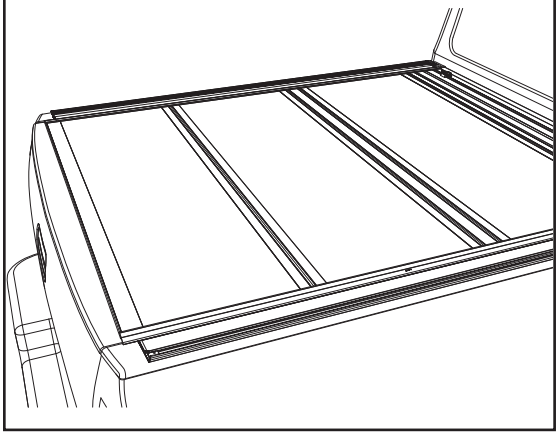

20 Once you are ready to install your accessory into the T-slot rails by sliding it through the rear slots in rails (A & B), remove the T-slot end plug using an 1/8" Allen wrench and sliding it out of each rear/tail end of rails (A & B). Once you have installed your accessory in each rail (A & B), re-install one T-slot end plug in the rear/tail end of each side rail at this time. Then tighten down the set screw in each T-slot end plug with a 1/8" Allen wrench.

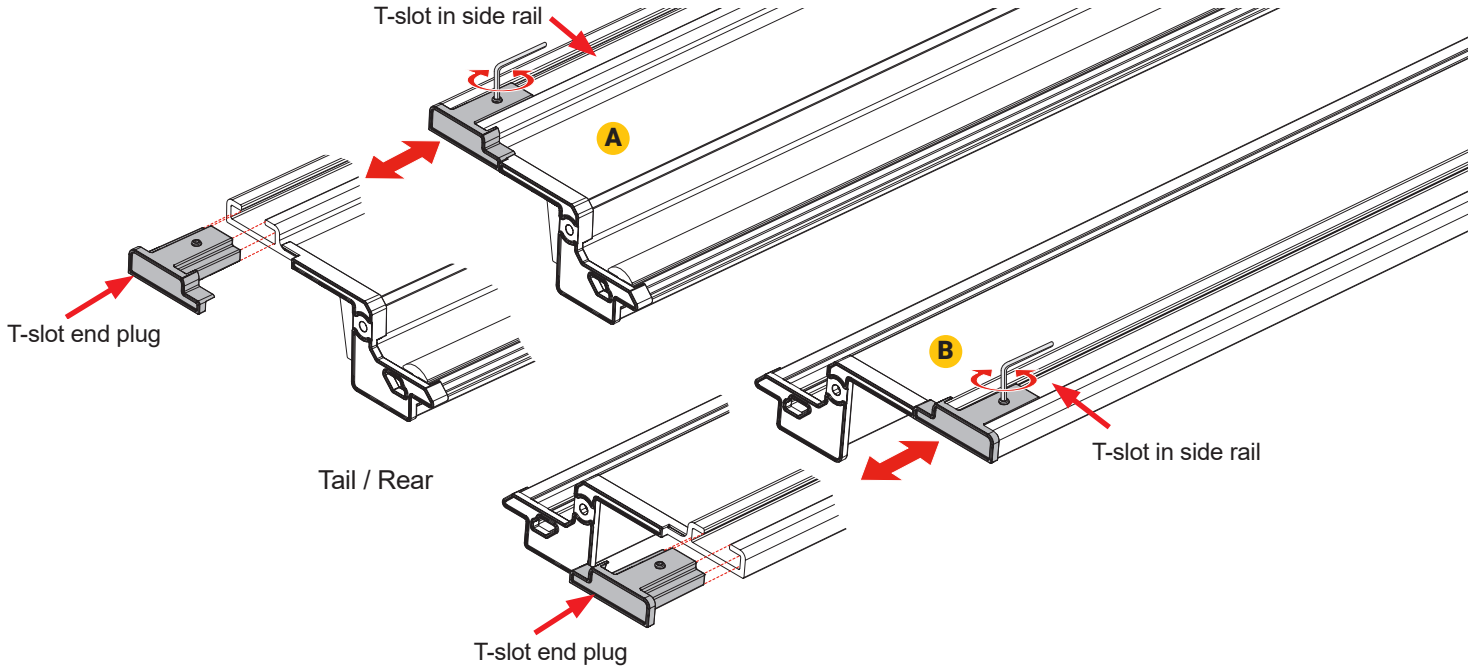

OPENING COVER: Lower the tailgate and pull the cable on either side. While pulling on the cable lift the panel up and towards the cab.

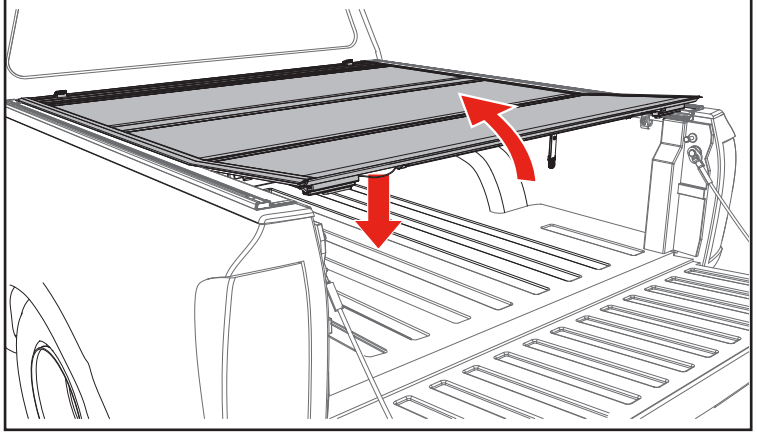

FOLDED UP POSITION: To drive with the cover (C) in the folded up position, use the straps and buckles provided with the cover. Attach the buckle at the bulkhead, then pull the strap to take up the slack and secure the cover.

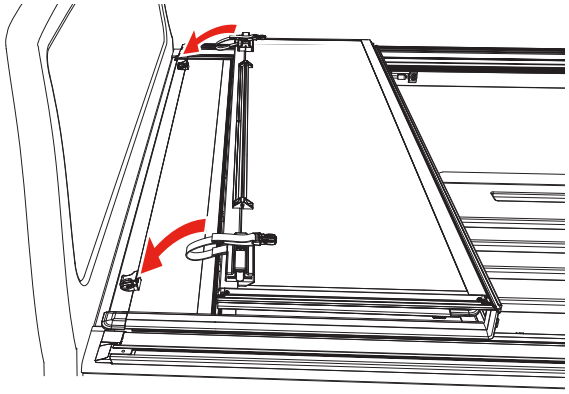

FLIPPED UP POSITION: Fold the cover (C) open and lift it until it's vertical or past 90 degrees towards the truck cab. Then release the prop rod that is attached to the rail. Fold the prop rod over and position it firmly against the vertical plate on the underside of the cover. Then slide the prop rod locks downwards and tighten the knobs to lock it into position. Do this on both sides of the cover. The cover should be firmly in position with little to no movement once the prop rods are locked.

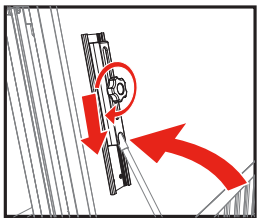

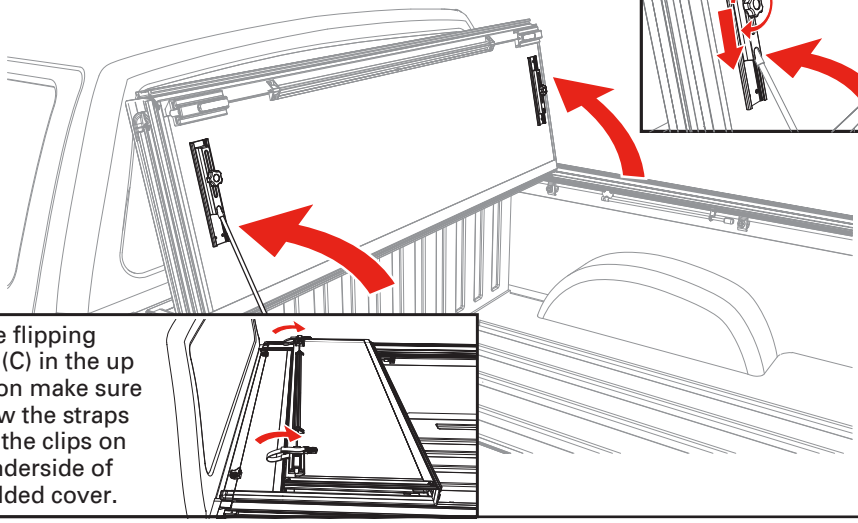

Before flipping cover (C) in the up position make sure to stow the straps using the clips on the underside of the folded cover.

CLOSING COVER: To drive with the cover (C) closed, unhook the buckles and straps from the bulkhead. Stow the straps using the clips on the underside of the folded cover. Fold all panels towards the tailgate making sure that all latches are engaged.

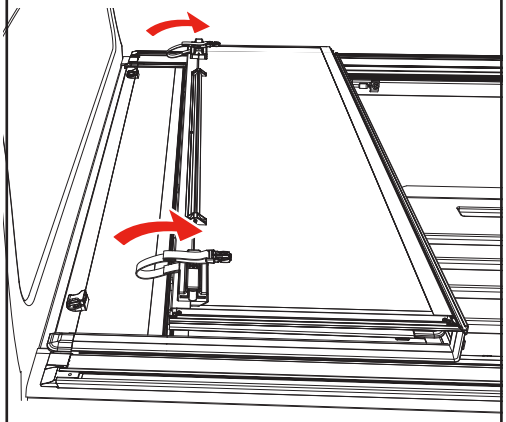

ADJUSTING SLAM LATCH

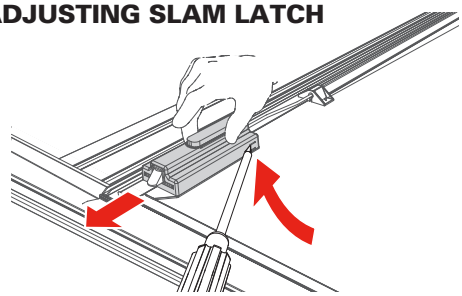

Use a screwdriver to partially pry open the tab on the latch housing. At the same time slide the housing away from the latch assembly.

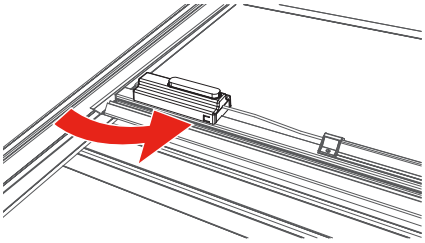

Note: that the tab is located on the opposite side of the housing on the passenger side of the cover.

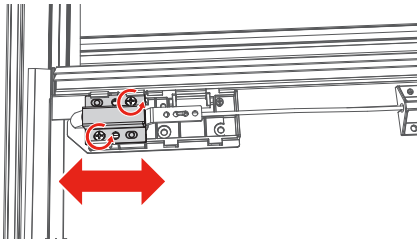

With the latch cover removed, loosen the screws and move the latch bracket to adjust. Retighten the screws. Slide the latch housing back on.

TROUBLESHOOTING TIPS

Leaning Rails: Improper engagement of the clamps can cause the rails to appear tilted inward. To ensure the clamps are properly installed loosen the nut. Adjust the clamp(s) until you have full engagement of sections 1 & 2, as shown below. When the clamp and rail are properly engaged an audible click will be heard. Overtightening the bolt can also contribute to tilted rails. **Do NOT over torque the bolt.**

PROPER RAIL & CLAMP ENGAGEMENT

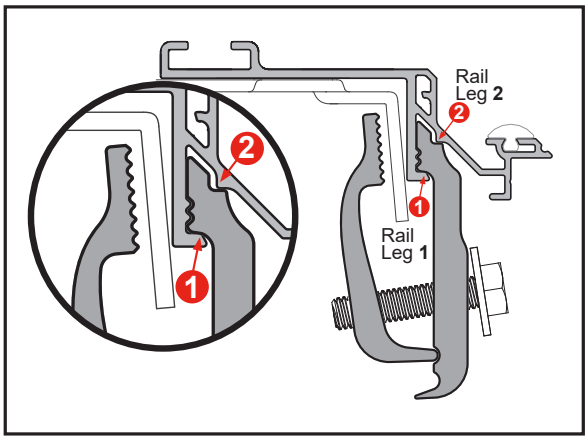

IMPROPER RAIL & CLAMP ENGAGEMENT

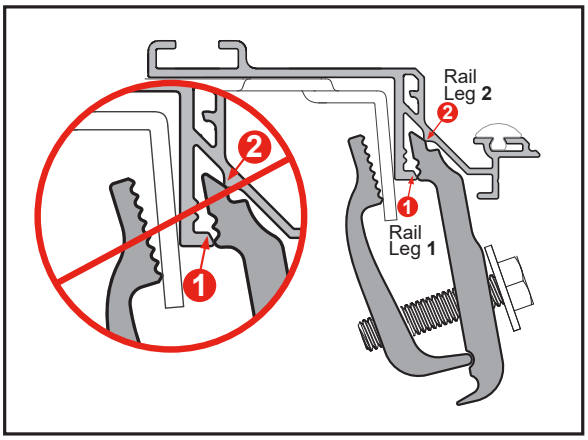

Water Intrusion: Make sure the retaining clamps are tight and properly engaged to the side rails. Check that the bulkhead seal is in place and the cover is resting on it. Make sure that all latches are engaged to the side rails and adjust if needed. Check that the side rails are installed flush with the top of the bed rail.

Sticking Latch: The cable could be pinched in or under the cable guide extrusion. Loosen the three screws on the center cable cover (bar), located in the middle of the panel. Slightly lift up on the cable guide extrusion. Pull on both sides of the cable.

Wavy Side Seal: The seal may be wavy when removed from the box. Allow ample sunlight for seal to lay flat and relax.

CARE AND MAINTENANCE

The truck bed cover requires occasional cleaning with mild automotive soap and water only. Avoid using abrasive cleaners as they may dull the finish. Some chemicals and fluids such as insect repellents, oils, solvents, and lubricants could potentially damage the rubber hinges and seals and void the warranty.

CAUTION

Always read the ingredients of any product you are using to clean your truck bed cover. Make sure that you use only products that are safe for use with rubber. Many cleaners contain chemicals that could permanently discolor or damage your hinges and seals.

Periodically check that your cover is securely attached to your truck bed and working as intended. Inspect all hardware such as clamps and cover retainer clamps to ensure they are properly installed and working as intended. Covers that are used at high frequency or subject to rough roadways and/or heavy vibration conditions may cause the cover to require adjustment.

It is also recommended that you regularly inspect and service each panel latch. Clean away any excess dirt or grime. Ensure all latches move freely in and properly engage the side rail to provide optimal performance and security.

SAFETY INSTRUCTIONS

- DO NOT place objects on or against cover or framework.
- DO NOT tie cargo to truck bed cover or framework.
- DO NOT operate vehicle with objects on top of the cover.
- NEVER allow children or pets to occupy the truck bed with the cover in the fully closed position.
- The cover is not airtight. Special care is required to keep cargo clean and dry.
- Truck bed covers will not prevent theft of contents inside the truck bed.
- For load ratings check the truck and racks owner's manual. When calculating the weight of cargo, be sure to include occupants and the cover. The MX4 TS truck bed cover with rack system = 100 lbs.
- To prevent damage or loss of cargo when driving, check that the cross bars and cargo are securely fastened. Loading cargo on the roof rack will increase the vehicle's center of gravity. Avoid high speeds, sudden starts, sharp turns, sudden braking, or abrupt maneuvers: otherwise, it may result in a loss of control. If driving for a long distance, on rough roads, or at a high speed, occasionally stop the vehicle and make sure the cargo remains in place. Do NOT ever exceed the maximum vehicle capacity when loading the vehicle.

LIMITED WARRANTY

WARRANTY COVERAGE

This truck bed cover is warrantied against defects in materials or workmanship as follows. This warranty is void if the product has been damaged in an accident, or due to neglect, unforeseeable use, improper installation, improper servicing, or other cause not arising out of defects in material or workmanship.

MX4 TS - The truck bed cover carries a limited warranty for **five (5) years** from the original date of purchase, subject to the terms below.

WARRANTY IS NOT TRANSFERABLE

The warranty is to the initial owner purchasing the truck bed cover and it is not transferrable to a subsequent end user. Proof of purchase may be required to enforce these warranty rights.

WARRANTY CONDITIONS

Failure to follow care and use instructions will void the warranty.

- Clean with mild automotive soap and water only.
- Cover must be secured at all points when vehicle is in motion.
- Check all clamps and retention mechanisms for tightness after a week of driving following installation (or re-installation) of the cover and periodically thereafter.
- Before opening, the cover must be free of all foreign materials including snow and ice.
- Do NOT tow your vehicle from the rear with the cover on your vehicle. If towing from the rear is required, the cover MUST be removed from the vehicle and properly stored.

WARRANTY PERFORMANCE

If all warranty conditions are met, a defective truck bed cover or hardware component will either be repaired or replaced (at our option). We reserve the right, for any warranty, to substitute a newer model or bed cover having similar form and function, to offer a warranty discount on an entire replacement system, and/or provide remedies other than those mentioned in this document.

WARRANTY RETURN

A Return Material Authorization number must be obtained from our Customer Service Department prior to returning any product. We may require the original item to be returned postage prepaid for final determination. Shipping charges will apply for any repair or replacement. Other than postage or shipping charges, no charge will be made for repair or replacement under this warranty.

This warranty gives you specific legal rights. As an owner, you may also have additional rights and remedies under the laws of your state.

WARRANTY REGISTRATION

Warranty registration must be on file and/or proof of original purchase (detailed and dated receipt) required for warranty to be effective.

https://realtruck.com/bak-warranty

REGISTER YOUR WARRANTY ONLINE