# REALTRUCK AMP RESEARCH BedStep®

| APPLICATION | MODEL YEAR | PART NUMBER |
|---|---|---|
| Ford Super Duty F250/F350 | 2023-2026 | 75330-01A |

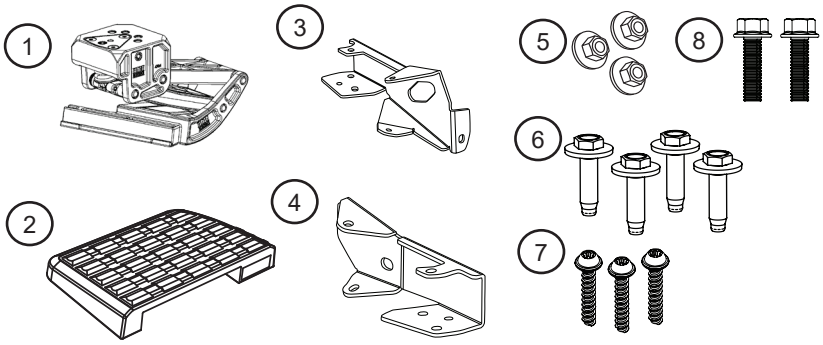


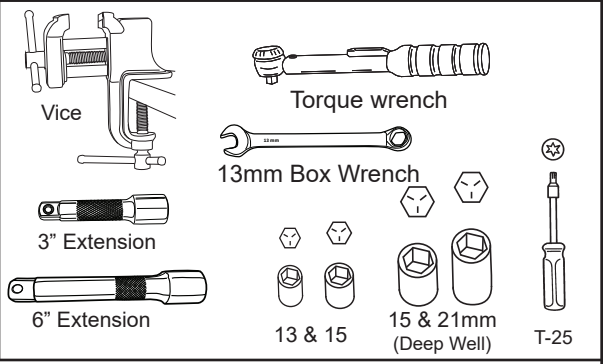


- Assemble bracket as shown below.
  - **Do not tighten!**

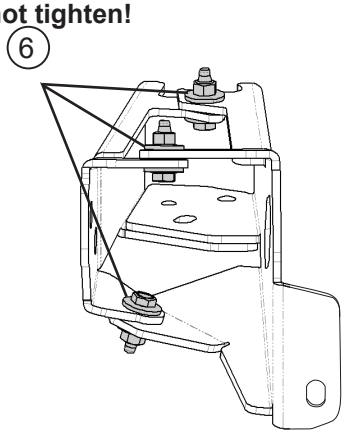

1

- Secure linkage in a vice to attach bracket.

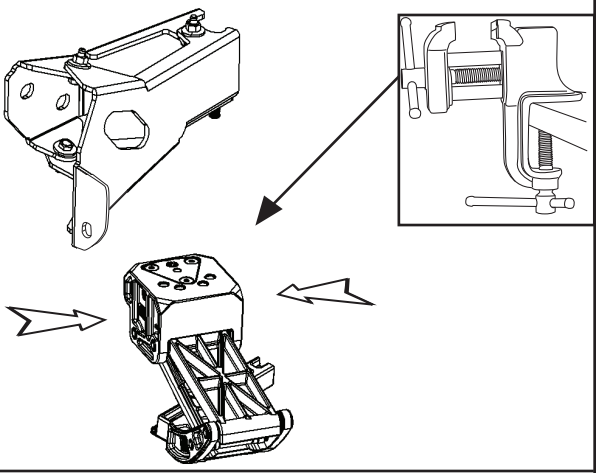

2

Attach bracket assembly to linkage as shown below.

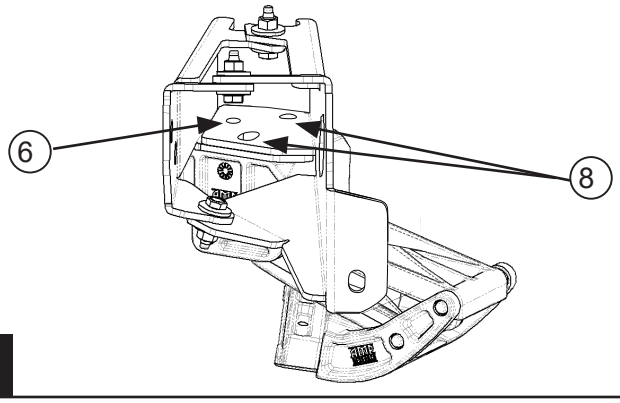


3

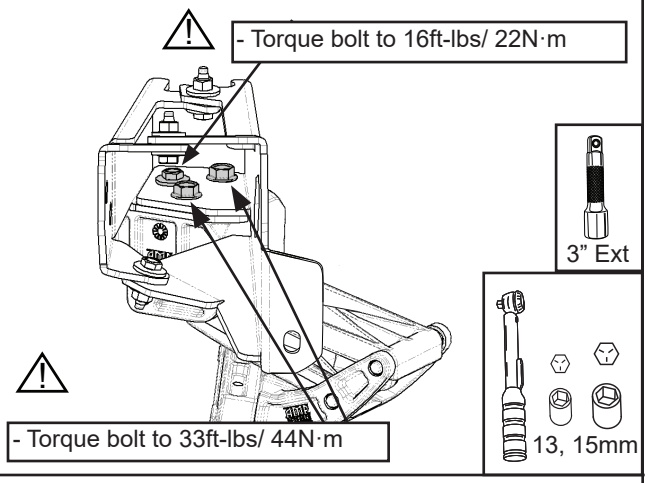


4

REALTRUCK TECH SUPPORT 1-888-983-2204 (Press 2) Monday - Friday, 8:00 AM - 5:00 PM EST

Designed and manufactured by RealTruck AMP Research® • Made in Mexico
Patent Protected. Please see our product site for applicable patents. www.realtruck.com/b/amp-research/
© RealTruck Group, Inc., 2026 • Three-year limited warranty. • Professional installation is recommended.

Remove linkage assembly from vice.

**Torque bolt to 16ft-lbs/ 22N·m**

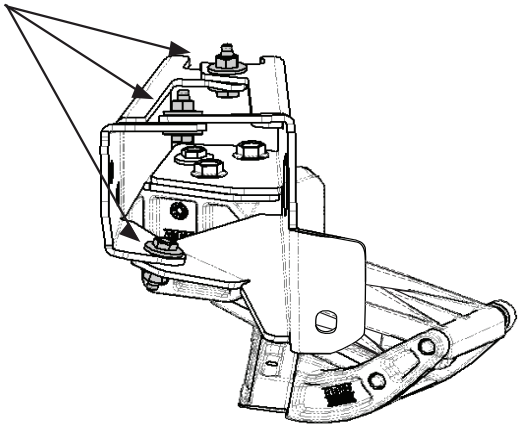

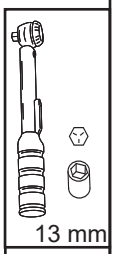


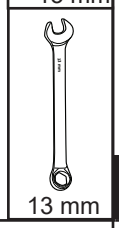


5

Remove both sets of nuts shown in image, set a side as they will be re-used with new bracket.

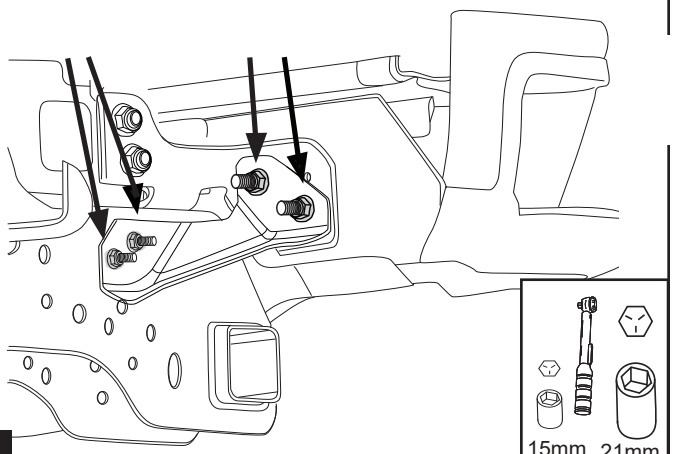

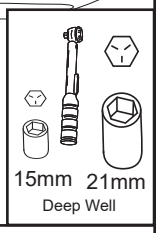


6

Push the two studs on the left side back enough to only expose about 1/4 of the stud. Remove Bracket and discard or store away.

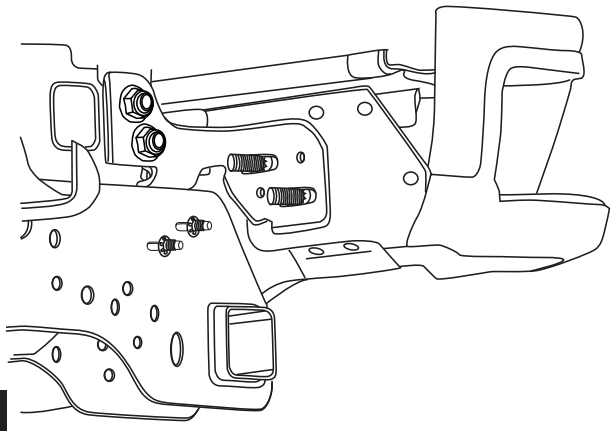

7

Add nut back to the stud on top right side (see arrow) of the 2 left studs, that stud won't be needed.
Set Bracket assembly into position over stud on the left bottom side and over the 2 studs on far right. See image.

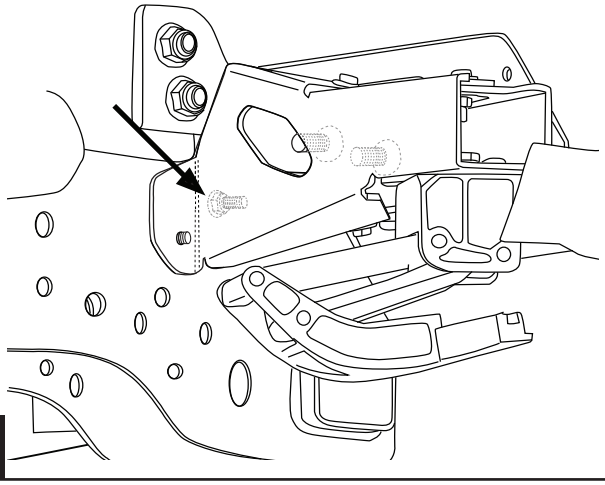

8

Re-insert nuts on right side using a 6" extender on wrench to reach studs. Tighten both nuts, making sure bracket remains flush and square.
**Do not Torque!**

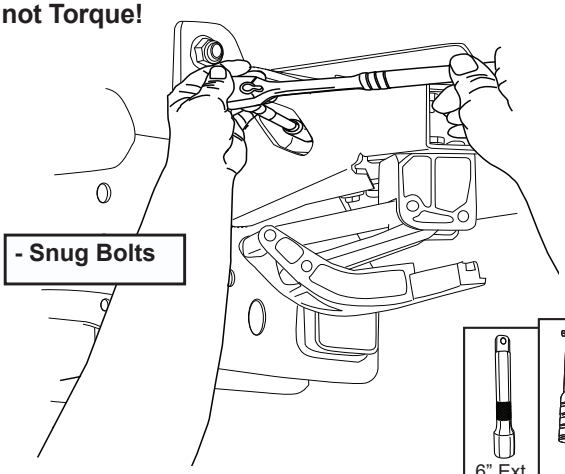


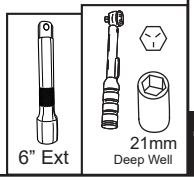


9

Next, re-insert nut on left side of bracket, bring forward stud by tightening until flushed with sheet metal.
**Do not Torque!**

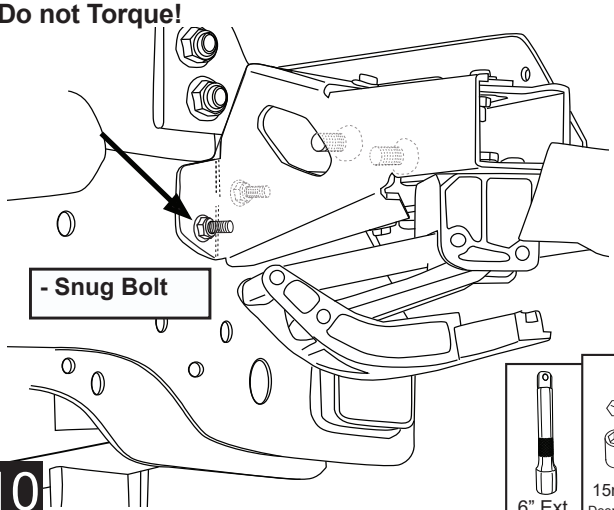


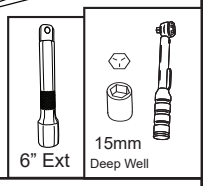


10

**Note: Verify bumper alignment before torquing bolts.**

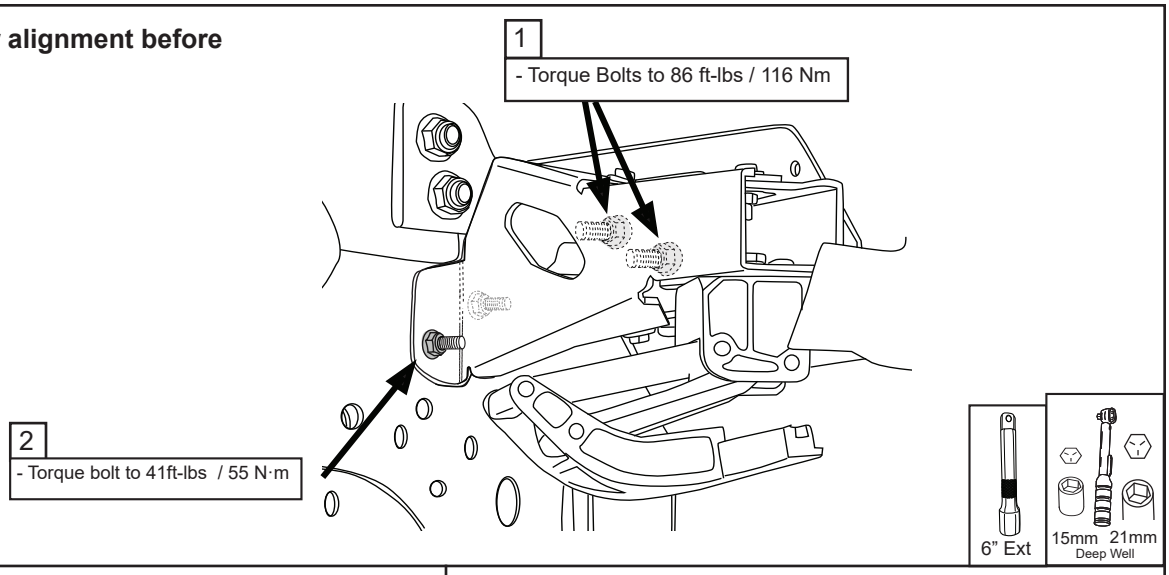


11

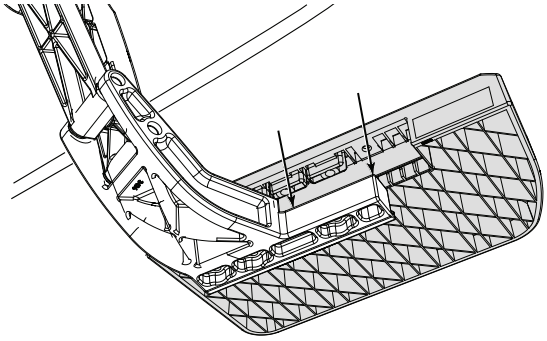

12

Insert PT Screws into corresponding holes and torque to 6 ft-lbs / 8 N.m.

**NOTE: Overtightening may damage step pad.**

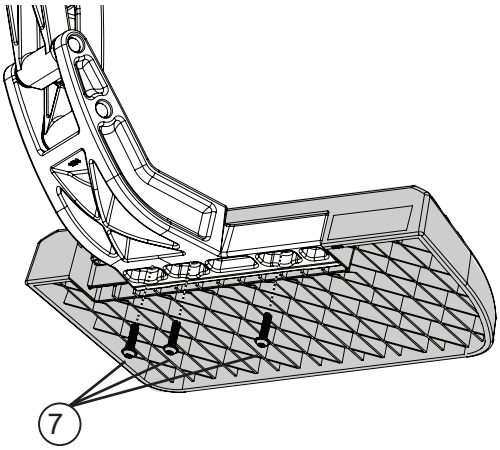


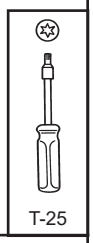


13

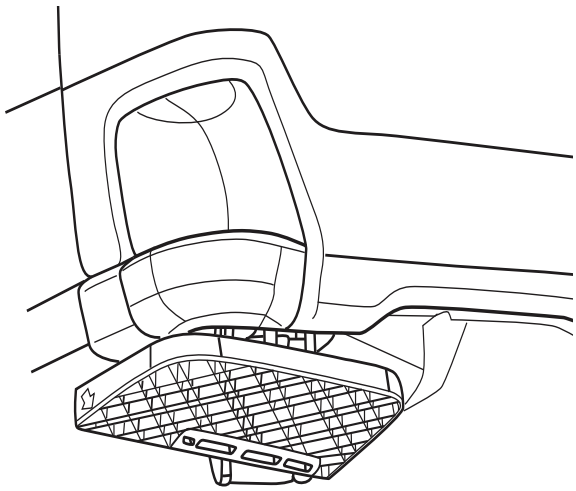

14

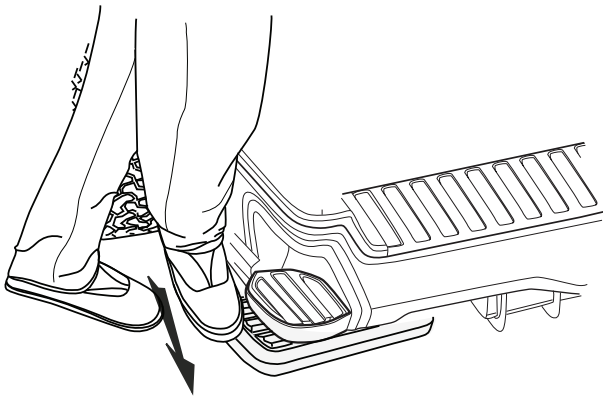

15

AMERICAN DESIGNED & ENGINEERED

**Thank you for your recent RealTruck purchase.**

# REGISTER YOUR PRODUCT TODAY FOR FASTER SERVICE & PRODUCT UPDATES

Please visit:
**https://realtruck.com/warranty-registration/**
or scan the QR Code

SCAN ME

## Product Registration Benefits:

• Ensure we have your purchase receipt and product info in our system which is required for warranty.

• Faster and easier access to customer service and tech support in the unlikely event you need warranty or product support.

• Registration helps us keep you up to date on product information and offers.

To view other RealTruck products that may be offered for your vehicle.
**Please visit: www.realtruck.com**

REALTRUCK AMP RESEARCH

BedStep®

**Congratulations on the purchase of your AMP Research BedStep®**

Here's what you should know...

## OPERATION

- The AMP Research BedStep® is foot operated and deploys and retracts with a nudge of your foot.
- To deploy, press down using your left foot, on the forward outside corner of the step pad.
- To retract, gently kick the underside of the step pad.
- Max Load Capacity: 300lbs.
- Always use appropriate hand holds when stepping up to or down from your truck's cargo bed.

## MAINTENANCE TIPS

The step pad surface and linkage arms can be washed with mild soap and water using a soft brush or sponge to dislodge any mud, dirt or accumulated road grime. Rinse with fresh water.

To prevent slipping, avoid applying waxes, lubricants or protectants like Armor All® to the step surface.

## ATTENTION!

BEDSTEP SHOULD ALWAYS BE STOWED IN THE RETRACTED POSITION WHEN DRIVING.

## LIMITED WARRANTY

**REALTRUCK warrants product to be free from defects in material and workmanship, for terms specified below, provided there has been normal use and proper maintenance. All remedies under this warranty are limited to the repair or replacement of any item found by the factory to be defective within the time period specified.**

**If you have a warranty claim, first you must call our factory at the number below for instructions. You must retain proof of purchase and submit a copy with any items returned for warranty work. Upon completion of warranty work, if any, we will return the repaired or replaced item or items to you freight prepaid. Damage to our products caused by accidents, fire, vandalism, negligence, misinstallation, misuse, acts by mother nature, or by defective parts not manufactured by us, is not covered under this warranty.**

**THE WARRANTY TIME PERIOD IS AS FOLLOWS: THREE YEARS FROM DATE OF PURCHASE.**

**ANY IMPLIED WARRANTIES OF MERCHANTABILITY AND/OR FITNESS FOR A PARTICULAR PURPOSE CREATED HEREBY ARE LIMITED IN DURATION TO THE SAME DURATION AND SCOPE AS THE EXPRESS WRITTEN WARRANTY. OUR COMPANY SHALL NOT BE LIABLE FOR ANY INCIDENTAL OR CONSEQUENTIAL DAMAGE.**

**Some states do not allow limitations on how long an implied warranty lasts, or the exclusion or limitation of incidental or consequential damages, so the above limitations or exclusions may not apply to you. This warranty gives you specific legal rights, and you may also have other rights that vary from state to state.**

**FOR WARRANTY ISSUES WITH THIS PRODUCT PLEASE CALL REALTRUCK CUSTOMER SERVICE 1-888-983-2204**

## WARNING

**Be sure to read and precisely follow the provided instructions when installing this product. Failure to do so could place the vehicle occupants in a potentially dangerous situation. After installing or reinstalling, re-check to insure that the product is properly installed.**