MAZDA CX-5 2026+

X-ACT CONTOUR FLOOR LINERS SECOND SEAT INSTALLATION SHEET

NOTE: It is important that all the areas where the accessory mounts to the vehicle are clean and free of debris before installation.

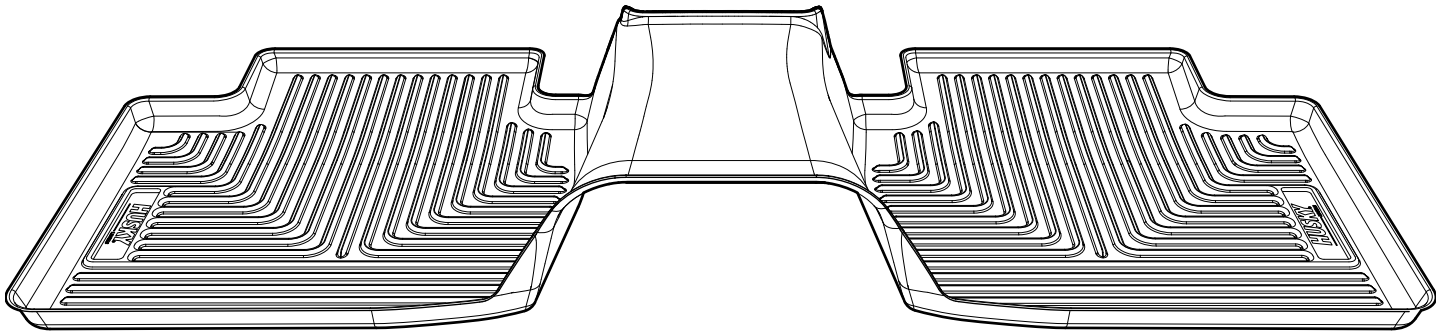

PARTS INCLUDED IN THE BOX

PART	DESCRIPTION	QTY	EXAMPLE
A	Floor liner *(Second seat)*	1	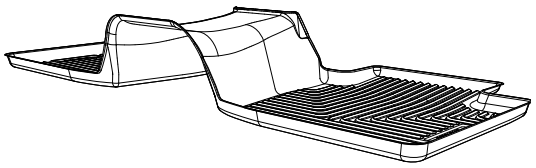

CUSTOMER SERVICE | 888-344-8759 | CustomerService@huskyliners.com | 5400 Data Court, Ann Arbor, MI 48108 | www.huskyliners.com

©RealTruck Group, Inc., 2026

Part# 7832 Rev. 8-04-26

INSTALLATION STEPS

1 Remove the second seat factory floor mat(s) before installation.

1. Slide both front seats all the way forward to give you room to work.
2. Remove any existing floor mats from the vehicle.

IMPORTANT: Do not remove the factory-installed carpeting.

2 Position the second seat floor liner.

1. Place the floor liner (A) into position, as shown.
2. Once the liner is secured in place, slide the front seats back to your preferred position.

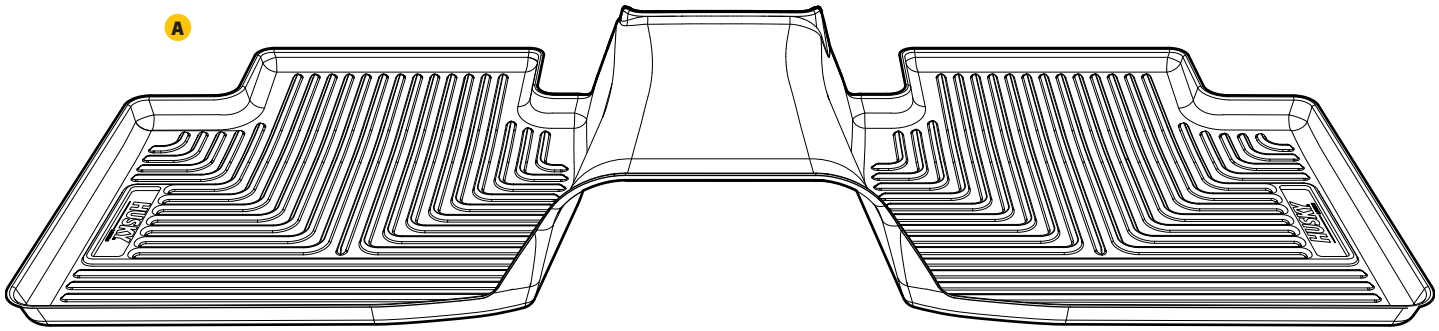

©RealTruck Group, Inc., 2026

TROUBLESHOOTING

Thank you for selecting a X-act Contour Floor Liner from Husky Liners. Your new liner is custom molded to fit your specific vehicle. The liner is made to take the place of your factory floor mats.

CARE AND MAINTENANCE

Your floor liners are made from a lightweight, tough engineering resin built to last. To clean them, wipe with a damp cloth or sponge. For heavier soiling, a mild household cleaner or glass cleaner works well. Avoid silicone-based protectants — they can make the surface slippery.

The material that your product is made from can be recycled. Please also consider recycling the packaging that your product came in.

LIFETIME WARRANTY

View the Husky Liners Lifetime Warranty at huskyliners.com/warranty-policies.

LIFETIME WARRANTY

©RealTruck Group, Inc., 2026