DODGE CHARGER 2026+

WEATHERBEATER™ FLOOR LINERS FRONT SEAT INSTALLATION SHEET

NOTE: It is important that all the areas where the accessory mounts to the vehicle are clean and free of debris before installation.

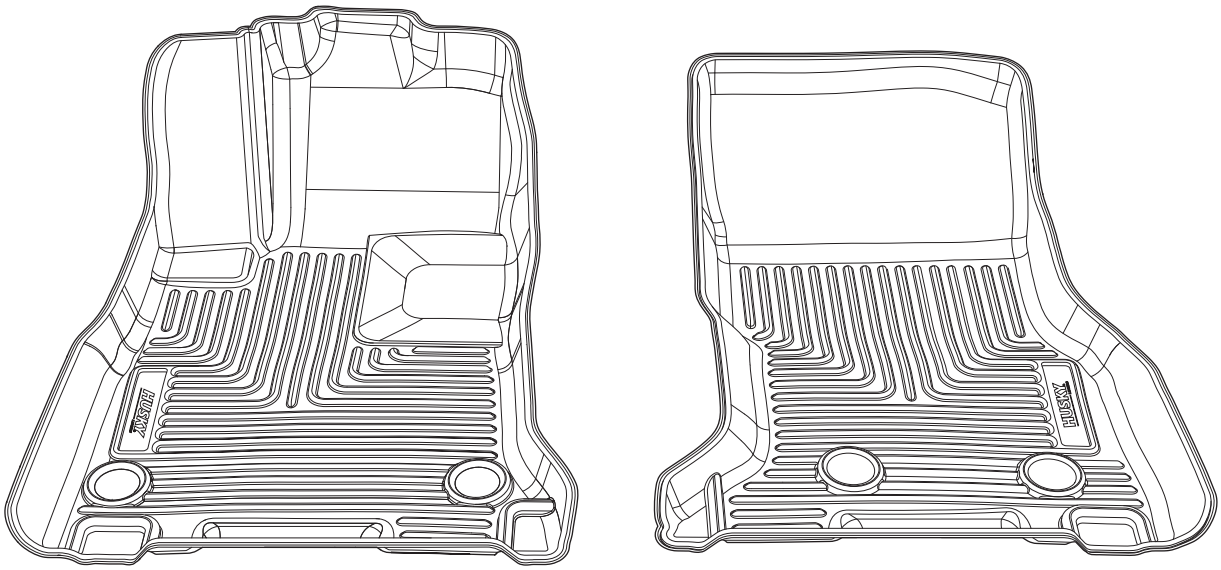

PARTS INCLUDED IN THE BOX

PART	DESCRIPTION	QTY	EXAMPLE
A	Driver side floor liner *(Front seat)*	1	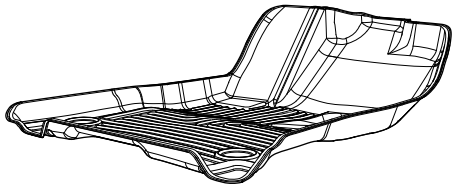
B	Passenger side floor liner *(Front seat)*	1	

CUSTOMER SERVICE | 888-344-8759 | CustomerService@huskyliners.com | 5400 Data Court, Ann Arbor, MI 48108 | www.huskyliners.com

©RealTruck Group, Inc., 2026

Part# 17941 Rev. 7-14-26

INSTALLATION STEPS

1 Remove the factory floor mats before installation.

1. Slide both front seats all the way back to give you room to work.
2. Remove any existing floor mats from the vehicle.

IMPORTANT: Do not remove the factory-installed carpeting.

2 Position floor liners.

1. Place each floor liner in position, as shown- driver side (A) on the left and passenger side (B) on the right.

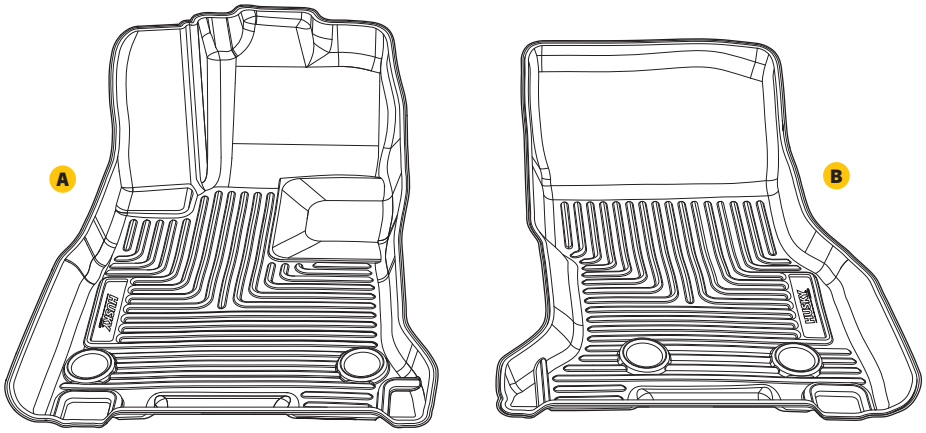

3 Secure floor liners to the factory floor mat retention hooks/posts.

1. Make sure each liner is secured onto the factory floor mat retention hooks/posts in the vehicle floor.
2. Once both liners are secured in place, slide the seats back to your preferred position.

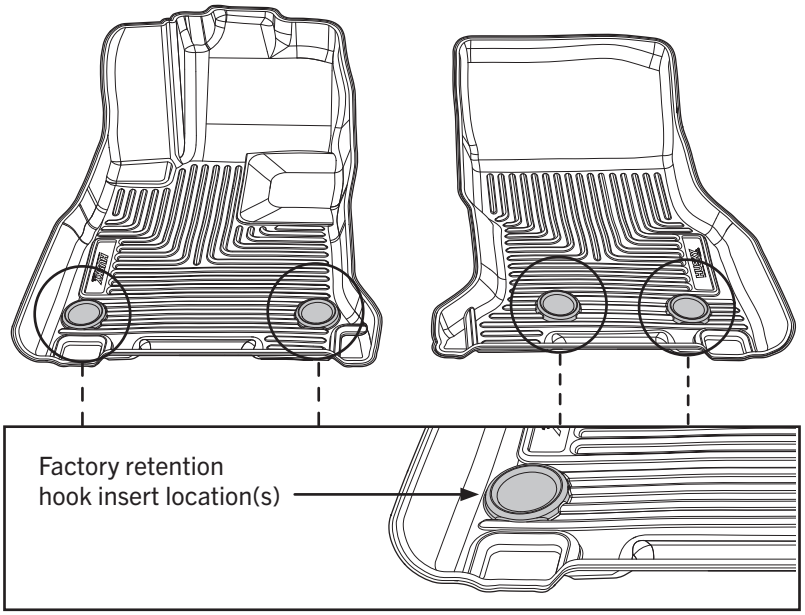

©RealTruck Group, Inc., 2026

TROUBLESHOOTING

Thank you for selecting a Weatherbeater® Floor Liner from Husky Liners. Your new liner is custom molded to fit your specific vehicle. The liner is made to take the place of your factory floor mat(s).

CARE AND MAINTENANCE

Your floor liners are made from a lightweight, tough engineering resin built to last. To clean them, wipe with a damp cloth or sponge. For heavier soiling, a mild household cleaner or glass cleaner works well. Avoid silicone-based protectants — they can make the surface slippery.

The material that your product is made from can be recycled. Please also consider recycling the packaging that your product came in.

LIFETIME WARRANTY

View the Husky Liners Lifetime Warranty at huskyliners.com/warranty-policies.

LIFETIME WARRANTY

©RealTruck Group, Inc., 2026