BORLA PERFORMANCE INDUSTRIES
500 Borla Drive
Johnson City TN, 37604-7523
805-986-8600

Installation Guide for Ford Ranger

PNs: 140971, 140971BC, & 140972

******* Please compare the parts in the box with the bill of materials provided ***** to assure that you have all the parts necessary for this installation.**

These instructions have been written to help you with the installation of your Borla Performance exhaust system. Please read this document completely before beginning the installation of your system.

To ensure this part number fits your specific model year, please visit our website for the latest model year listings at www.BORLA.com

Thank you for purchasing a Borla Performance Cat-Back™ exhaust system.

Borla Performance Cat-Back™ exhaust system PNs 140971, 140971BC, and 140972 are designed for the Ford Ranger, equipped with a 2.7L V6 twin turbo-charged engine and 4WD automatic transmission.

Borla Performance Industries recommends that an exhaust shop or professional after market parts installer, who has all the necessary equipment, tools and experienced personnel needed for proper installation, should perform the installation of this system. However, if you decide to perform the installation, we recommend someone should help you. Ensure the installer uses all under car safety precautions including eye protection.

Please take time to read and understand the following…

By installing your Borla Performance exhaust system, you indicate that you have read this document and you agree with the terms stated below.

It is the responsibility of the purchaser to follow all installation instruction guidelines and safety procedures supplied with your Borla Performance exhaust system.

Borla Performance Industries assumes no responsibility for damages occurring from misuse, abuse, improper installation, improper operation, lack of responsible care, or all previously stated reasons resulting from incompatibility with other manufacturer's products and/or systems.

Included with your Borla Performance exhaust system is a warranty card. Please read it carefully before you begin any work on your vehicle. If you should have any questions regarding our warranty policy, installation, or any other matter pertaining to your new Borla Performance exhaust system, please give us a call at the number provided on the warranty card.

Minimum Required Tool List:

TOOLS:
1. 3/8” drive ratchet
2. 3/8” drive extension 6”
3. 10mm socket
4. 15mm deep well socket
5. Pry bar

SHOP SUPPLIES:
1. Spray lubricant

Borla Performance - Bill of Materials

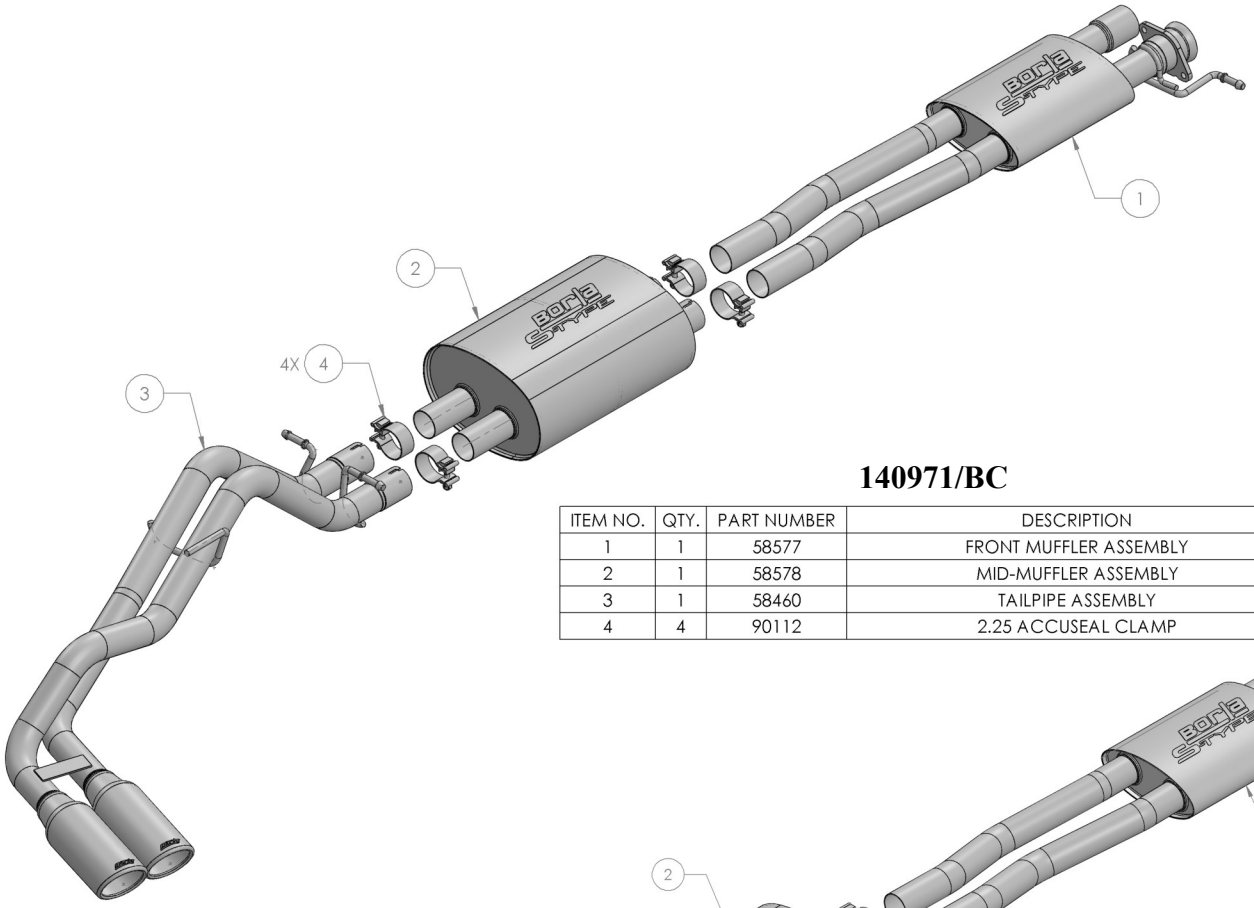

140971/BC

ITEM NO.	QTY.	PART NUMBER	DESCRIPTION
1	1	58577	FRONT MUFFLER ASSEMBLY
2	1	58578	MID-MUFFLER ASSEMBLY
3	1	58460	TAILPIPE ASSEMBLY
4	4	90112	2.25 ACCUSEAL CLAMP

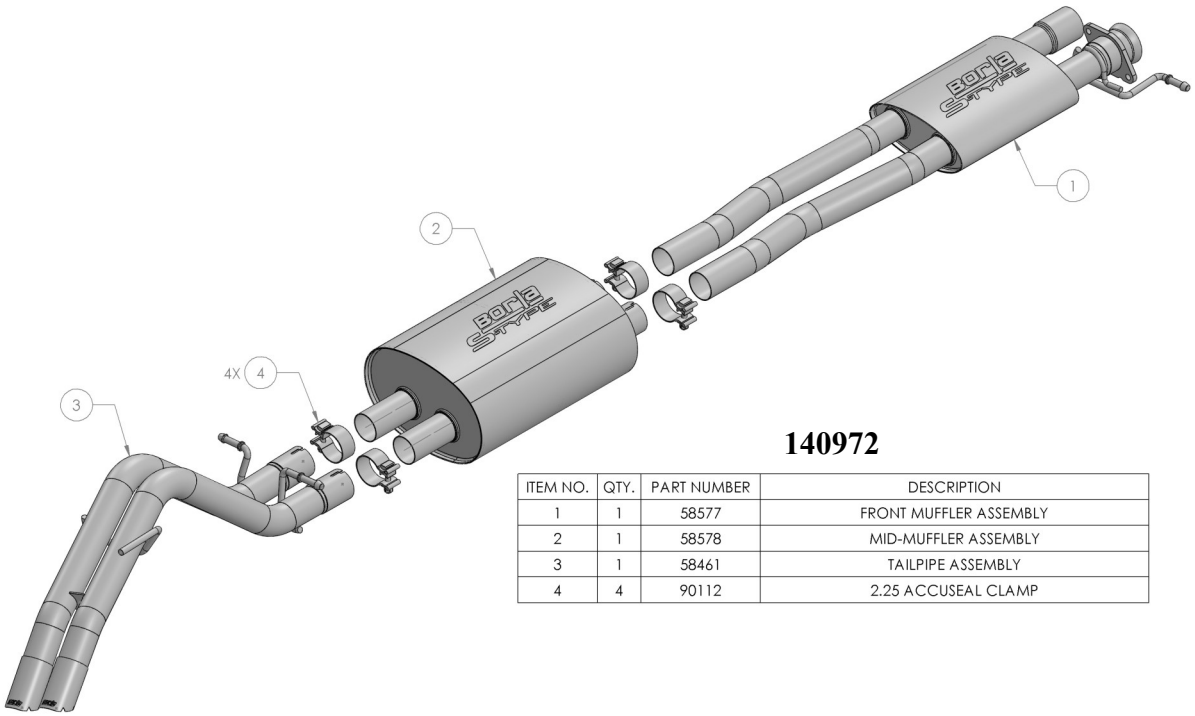

140972

ITEM NO.	QTY.	PART NUMBER	DESCRIPTION
1	1	58577	FRONT MUFFLER ASSEMBLY
2	1	58578	MID-MUFFLER ASSEMBLY
3	1	58461	TAILPIPE ASSEMBLY
4	4	90112	2.25 ACCUSEAL CLAMP

BORLA PERFORMANCE INDUSTRIES
500 Borla Drive
Johnson City TN, 37604-7523
805-986-8600

Caution!!! Never work on a hot exhaust system. Serious injury in the form of burns can result If the vehicle has been in use and the exhaust system is hot, allow vehicle to cool for at least 1 hour. Always wear eye protection when working under any vehicle.

Note: It is our recommendation that you use a hoist or hydraulic lift to facilitate the installation of your new Borla Performance Exhaust System.

Taking all under car safety precautions, lift the vehicle using a hoist or hydraulic lift. Once this has been done, you may begin the removal of your old exhaust system from your vehicle.

Note: Before removing the original exhaust system from your vehicle, please compare the parts you have received with the bill of materials provided on the previous page to assure that you have all the parts necessary for the installation of your new Borla Performance Exhaust System.

Note: With a used vehicle, we suggest a penetrating spray lubricant to be applied liberally to all exhaust fasteners and allowing a significant period of time for the chemical to lubricate the threads before attempting to disassemble.

Original Exhaust System Removal

1. Lubricate all hangers, rubber isolators, bolts and nuts.
2. Loosen the clamp at the front of the rear muffler assembly (Fig. 1).
3. Loosen and remove the hardware attaching the tailpipe isolator assembly to the vehicle and remove the isolator assembly from the tailpipe hanger (Fig. 2). Save this hardware and isolator for installation of your Borla system.
4. Using a flathead screwdriver or a pry bar, remove the rear muffler assembly hangers from their rubber isolators (Fig. 3).
5. Remove the entire rear muffler assembly by moving the entire system down and out toward the front of the vehicle (Fig. 4).
6. Bend the tab back on the clamp on the inlet to the front muffler assembly and loosen the clamp on the front muffler side. Loosen and remove the hardware connecting the flange to the exhaust and the hardware connecting the isolator assembly to the vehicle (Figs. 5-6). Save this hardware for installation of your Borla system.
7. Remove the front muffler assembly from the vehicle and remove the isolator assembly from the hanger (Fig. 7). Save this isolator assembly for installation of your Borla system.
8. Original exhaust system removed.

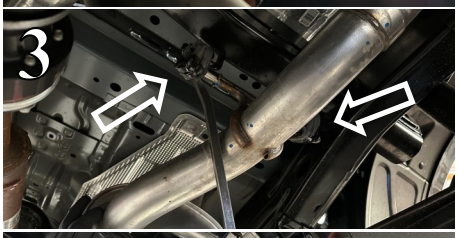

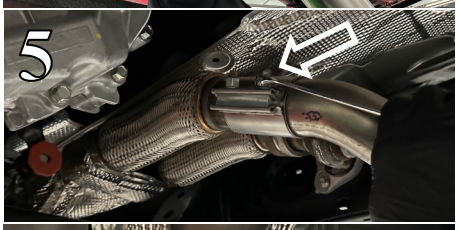

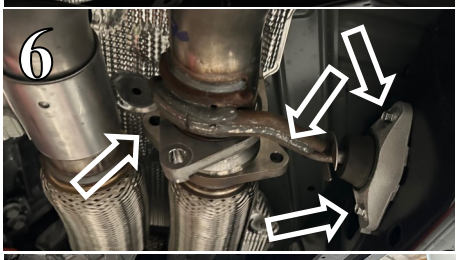

BORLA PERFORMANCE INDUSTRIES
500 Borla Drive
Johnson City TN, 37604-7523
805-986-8600

Borla Performance Cat-Back ™ Exhaust System Installation

1. Orient components on shop floor according to Borla bill of materials drawings on page 2.
2. Install the original isolator assembly onto the vehicle using the original hardware (Fig. 8).
3. Insert the inlet of the **Front Muffler Assembly** to the original clamp and mate the flange with the one on the vehicle. Loosely tighten the original hardware on the flange. Insert the hanger into the original isolator assembly (Figs. 8-9). Do not tighten the clamp.
4. Place a clamp over each of the expanded ends of the **Mid-Muffler Assembly** and insert the inlets to the **Front Muffler Assembly** (Fig. 10). Do not tighten the clamps.
5. Install the original tailpipe isolator assembly onto the corresponding hanger of the **Tailpipe Assembly** (Fig. 11).
6. Place a clamp over each of the expanded ends of the **Tailpipe Assembly** and insert the inlets to the **Mid-Muffler Assembly**. Insert the hangers into the original rubber isolators (Fig. 12). Do not tighten the clamps.
7. Attach original tailpipe isolator assembly to the vehicle using the original hardware (Fig. 13).
8. Once position has been determined to be correct, tighten the Accuseal clamps to 32-35 ft. lbs. (Fig. 14).
9. Before starting your vehicle, make sure to check all wires, hoses, brake lines, body parts and tires for safe clearance from the exhaust system.
10. Start the vehicle and check for any leaks. If any leaks are found, determine cause (such as loose or incorrectly positioned clamp) and repair as necessary.

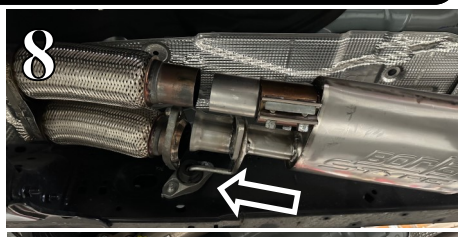

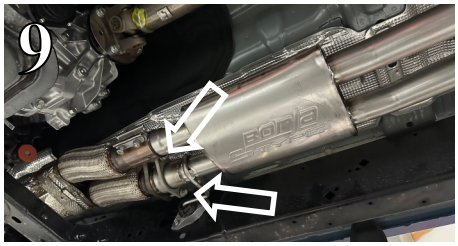

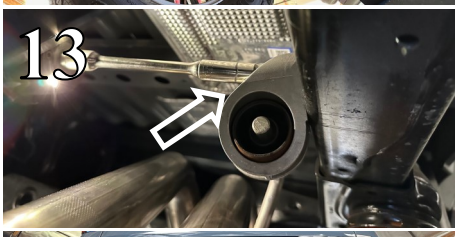

***WARNING:** Use extreme caution during installation. Torque all fasteners according to manufacturer's torque values and tightening sequence. DO NOT use air impact tools to tighten fasteners on Borla Performance Exhaust Systems. Use of such tools may result in bent flanges or gasket contact areas leading to exhaust leaks.*

NOTE: When you first start your vehicle after the installation of your new Borla Performance Exhaust System, there may be some smoke and fumes coming from the system. This is a protective oil based coating used in the manufacturing of mandrel bent performance exhaust tubing. This is not a problem and will disappear within a very short period of time after the exhaust has reached normal operating temperatures.