TOYOTA TACOMA 16-23

REVOLVER X4TS
INSTALLATION SHEET

CUSTOMER SERVICE
PHONE: 818-365-9000, Mon-Fri 8:30 am - 6:00 pm EST
EMAIL: support@bakindustries.com

NOTE: It is important that all the areas where the bed cover mounts to the truck are clean and free of debris before installation.

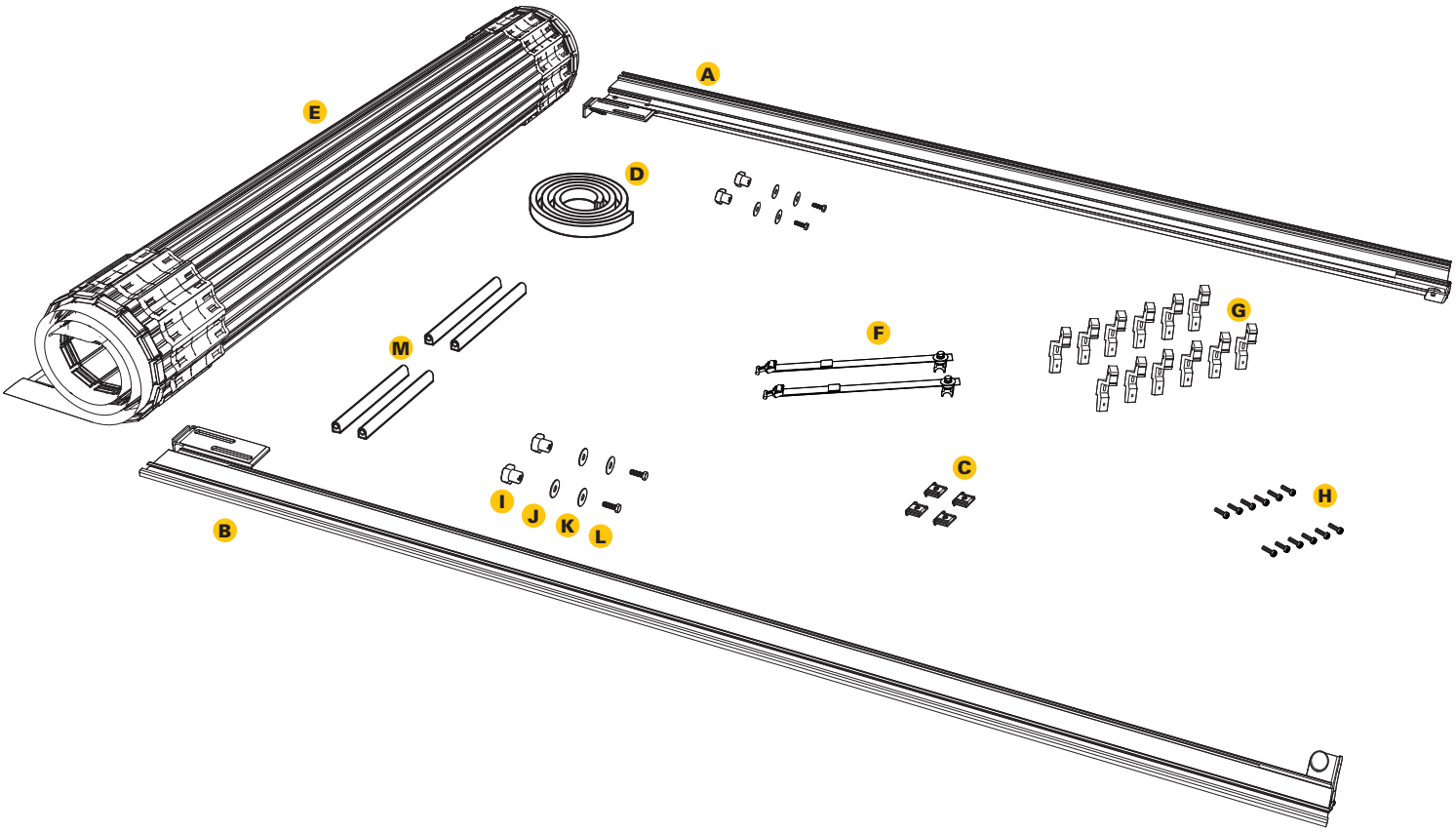

PARTS INCLUDED
(If installing ts rails to an existing Revolver system)

- **A** 1x Passenger side cover rail
- **B** 1x Driver side cover rail
- **C** 4x End caps

TOOLS REQUIRED

- T-30 Torx socket
- Drill or socket wrench

TOOLS PROVIDED

- 1/8” Allen wrench

PARTS INCLUDED
(If installing a complete new Revolver X4ts cover system)

- **D** 1x Bulkhead seal
- **E** 1x Rolled cover
- **F** 2x Strap clamp assemblies
- **G** 10x S Clamps *(12x for 6’ trucks)*
- **H** 10x Screws *(12x for 6’ trucks)*
- **I** 4x Lock knobs
- **J** 4x Large flat washers
- **K** 4x Rubber washers
- **L** 4x Mounting bolts
- **M** 4x D-shaped bumpers

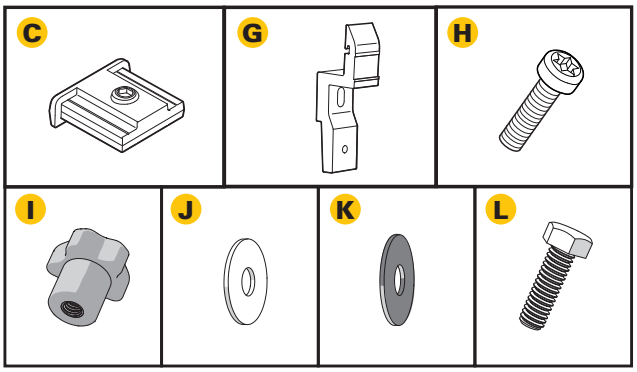

 ©RealTruck Group, Inc., 2026

Part# 318S0058 Rev. 7-28-26

⚠ IMPORTANT

READ BEFORE YOU BEGIN INSTALLATION

IT IS CRITICAL FOR YOUR SAFETY THAT YOU CAREFULLY READ AND FOLLOW THE SAFETY CAUTIONS AND INSTALLATION INSTRUCTIONS BOTH PRIOR TO AND DURING INSTALLATION.

USER SAFETY CAUTION

During installation, be mindful of the potential for sharp edges on the product or vehicle. Taking proper safety precautions helps ensure a safe and smooth installation process.

Always wear protective gloves and handle components with care to reduce the risk of injury.

TEMPERATURE SURFACE CAUTION

During high temperatures or extended sun exposure, surfaces of this product may become hot to the touch, posing a risk of burns or injury. Use caution when handling the product in hot weather and allow time for it to cool before contact.

Always check surface temperature before use to ensure safe handling conditions.

FASTENER TORQUE CAUTION

All fasteners must be tightened to the specified torque values provided in the installation instructions to ensure proper fit and safe operation of the tonneau cover. Under- or over-tightening can lead to product failure, potential damage to your vehicle, injury, or safety hazards while driving.

Always use a calibrated torque wrench and follow the specifications in the installation instructions.

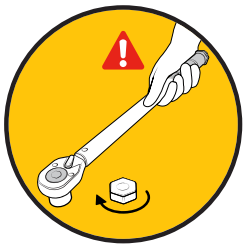

PINCH POINT SAFETY CAUTION

This tonneau cover may create pinch points when closing or operating near solid surfaces such as the truck bed rails or tailgate. To prevent injury, keep hands, fingers, and other body parts clear of moving parts during operation.

Always operate the cover slowly and with caution to ensure safe and proper use.

ENTRAPMENT SAFETY WARNING

This tonneau cover does not feature a manual release mechanism from inside the truck bed. To prevent the risk of entrapment, never allow anyone to be inside the bed of the truck when the cover is closed.

Always ensure the area is clear before closing the cover, and keep the cover securely latched when not in use to avoid accidental closure.

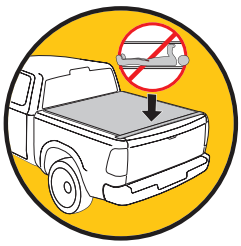

COVER ATTACHMENT WARNING

A partially rolled up or unsecured cover may detach during transit, risking vehicle or property damage and personal injury.

Always verify the tonneau cover is properly secured before operating the vehicle.

CARGO TRANSPORT WARNING

When transporting cargo that is taller than the truck bed, the cover must be fully rolled open and securely fastened with both retainer straps. An unsecured cover can detach while driving, risking vehicle or property damage and personal injury.

Never operate the vehicle with a partially rolled up cover.

COVER POSITION WARNING

Before operating the vehicle, always verify the tonneau cover is either fully rolled open and secured with both T-hook buckles or fully rolled closed and securely latched down.

Never operate the vehicle if the tonneau cover is not properly secured.

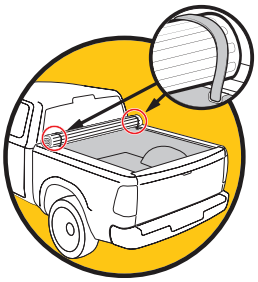

IF YOU ARE INSTALLING A NEW TRUCK BED COVER, PLEASE START AT STEP 7.

1 Open the rolled cover (E).

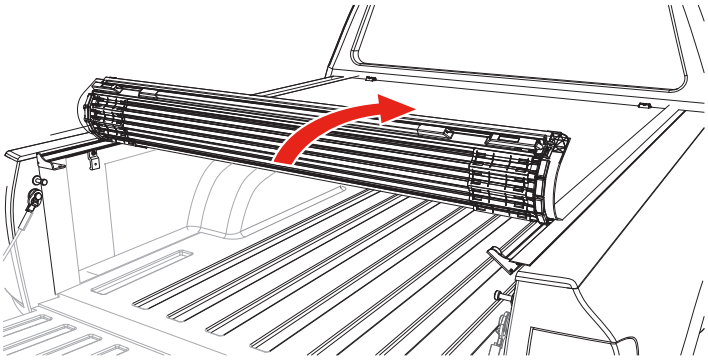

2 Remove the mounting hardware underneath the slotted bracket on the current passenger side cover rail and the current driver side cover rail. **Keep the hardware for later reinstallation.**

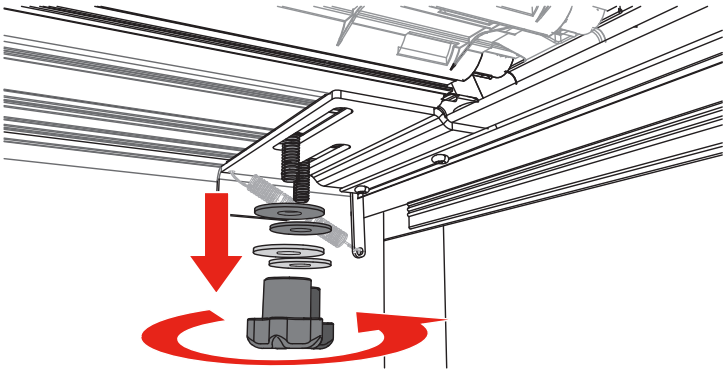

3 Remove the rolled cover (E) with the four mounting bolts (L) from the slotted bracket in the rail.

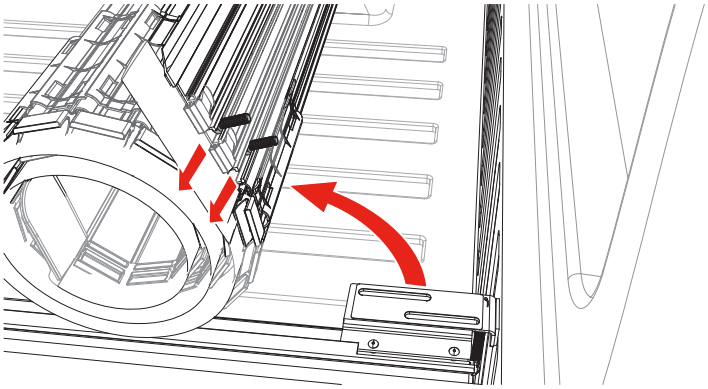

4 Remove the rolled cover (E) from the vehicle.

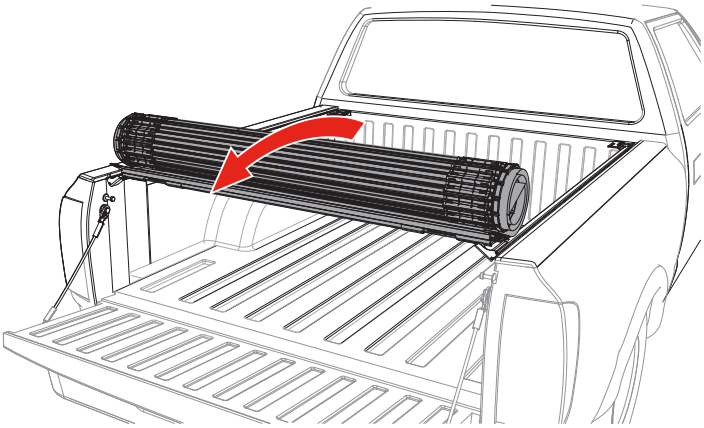

5 Remove both cargo rails and their screws, using a drill/socket wrench. (Keep the strap clamp assemblies (F) attached to the cargo rails.) **Keep the cargo rails with the strap clamp assemblies and screws (H) or later reinstallation.**

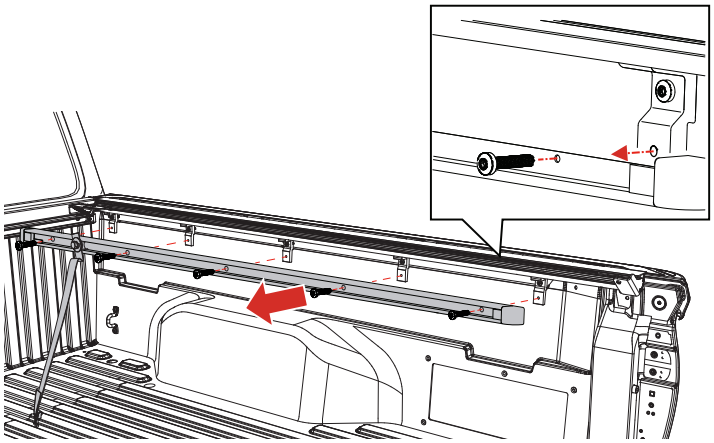

6 Remove the current passenger side rail and the current driver side rail, together with their S clamps (G), using a drill/socket wrench. **Keep the screws for later reinstallation.**

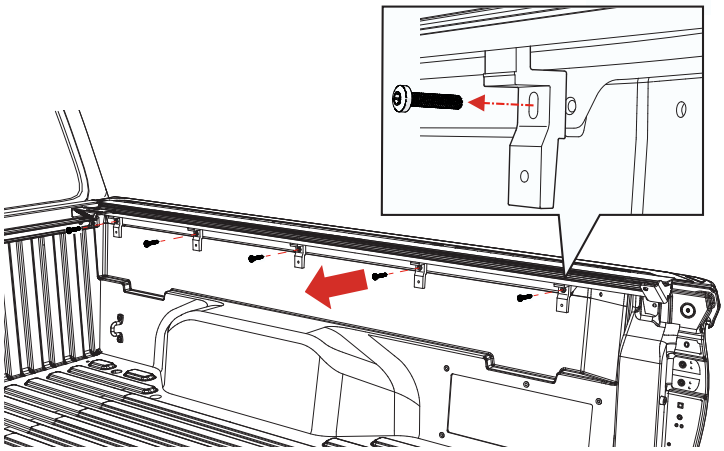

7 Remove the S clamps (G) from the passenger side rail (A) and the driver side rail (B). Simply slide out of the slot, as shown. Keep the S clamps for later reinstallation.

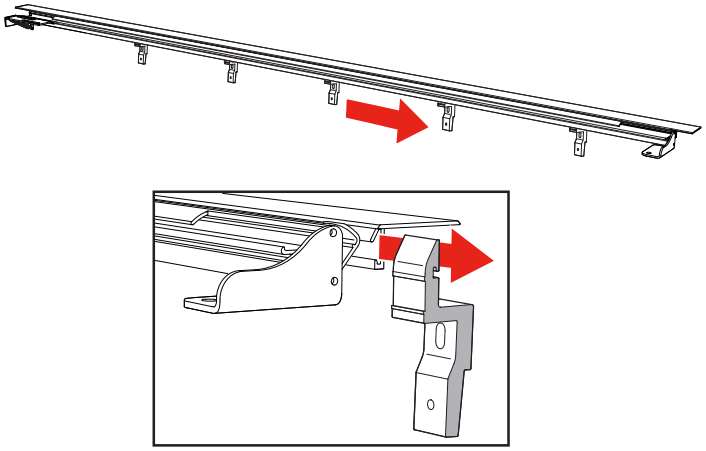

8 Install one end cap (C) on the forward portion ONLY of the new passenger side cover rail (A), as shown. Tighten the set screw with the provided Allen wrench. Do this also on the new driver side cover rail (B).

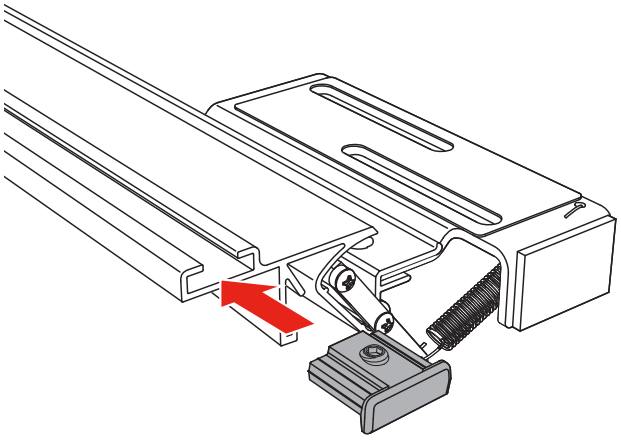

9 Install the bulkhead seal. Clean the top of the bulkhead where the seal will go with soap and water to remove dirt and debris. Then clean the same area with isopropyl alcohol to remove wax or grease and to evaporate any remaining water. Allow the surface to dry. The seal should be placed flush with the front edge of the bulkhead and should be snug between the truck bed rails. Peel the backing paper from the bulkhead seal (D) and apply pressure to the entire seal to make sure that the adhesion is good.

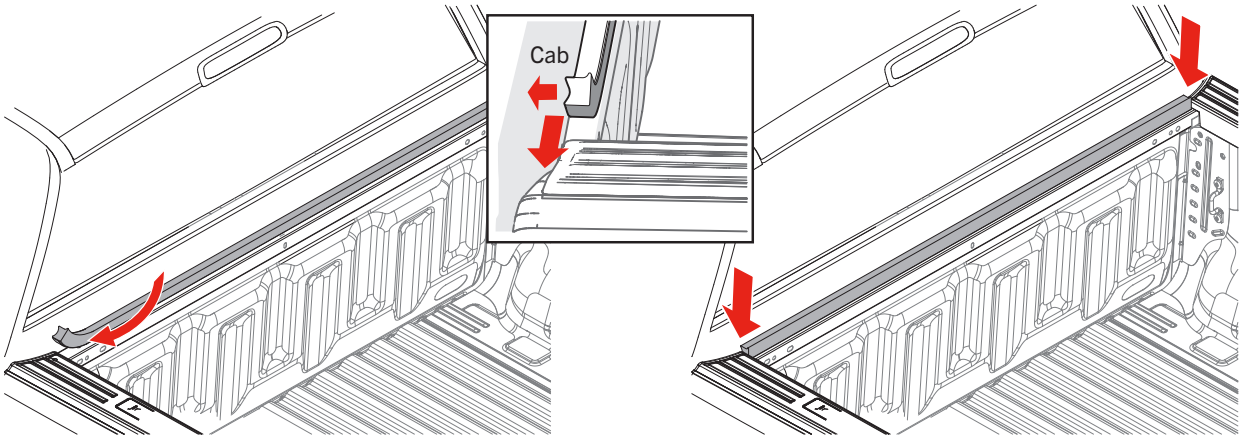

10 Align the S clamps (G) with the passenger side rail slot and insert into the new passenger side cover rail (A). The S clamps should match the truck bed hole locations.

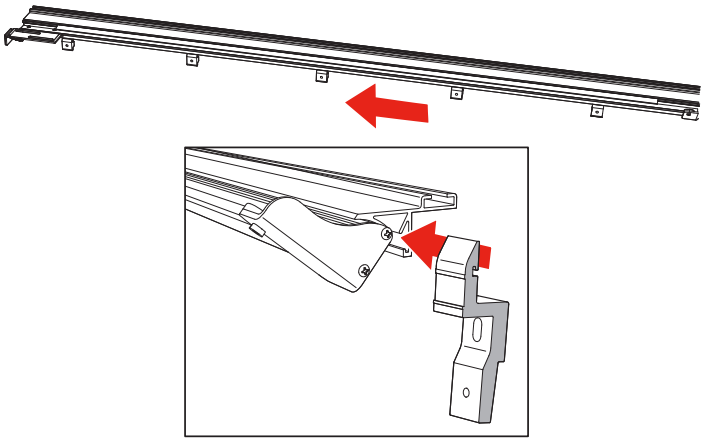

11 Mount the passenger side rail (A) into the holes in the truck bed. Reuse the screws from step 6, using a drill/socket wrench. Before tightening, make the necessary adjustments for the rail so that it has proper clearance to both the front cargo rail and the tailgate. Make sure the passenger side rail is pushed tight up against the front cargo rail.

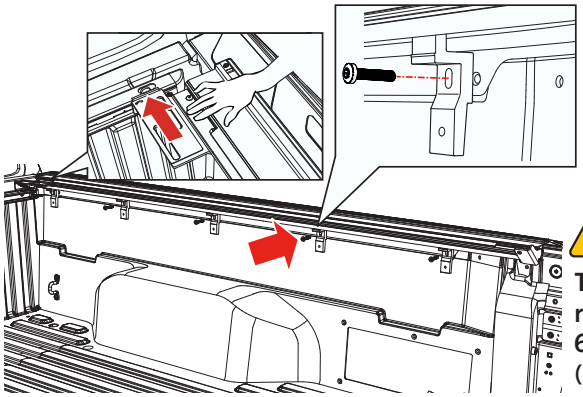

Torque requirement: 6 ft-lbs. (7.5 Nm)

12 Mount the cargo rail, along with the strap clamp assembly (F), using the screws (H) and a drill/socket wrench, through the lower hole in the S clamp (G) on the passenger side rail (A).

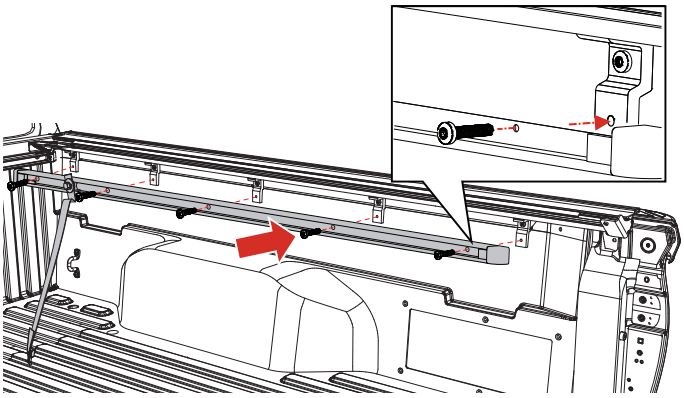

Torque requirement: 6 ft-lbs. (7.5 Nm)

13 With both rails (A & B) clamped in place, rest the rolled cover (E) onto the rails at the cab, roll the cover toward the tailgate, remove and discard all packaging materials. Fold the front panel back and insert the two mounting bolts (L) into the two slots, do this for both sides. The bolts will align with the slotted bracket of the cover rail (A & B). Fold the panel back down.

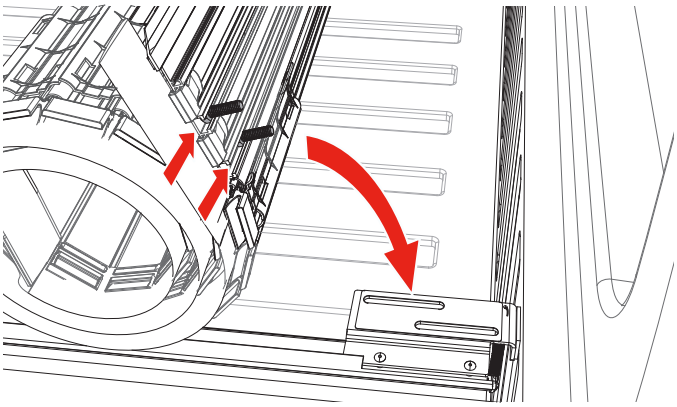

14 Install the mounting hardware from step 2 loosely underneath the slotted bracket on the passenger rail (A). Start with the rubber washer (K), then the large flat washer (J), then hand tighten the knobs (I). Repeat on the driver's side. Leave the knobs loose for now.

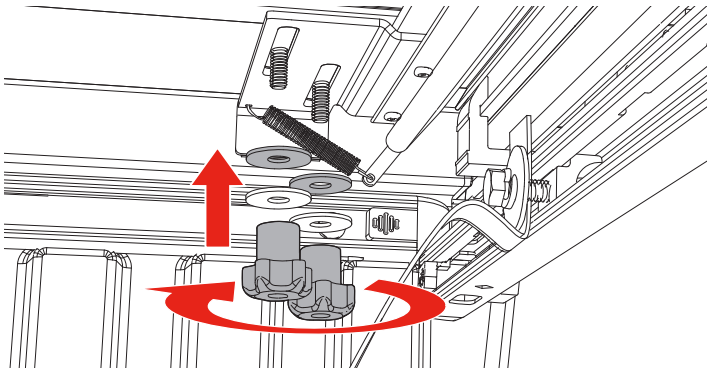

15 Open and close the cover (E) several times to verify that it rolls freely. The cover should be square with the cover rails and roll freely between the rails.

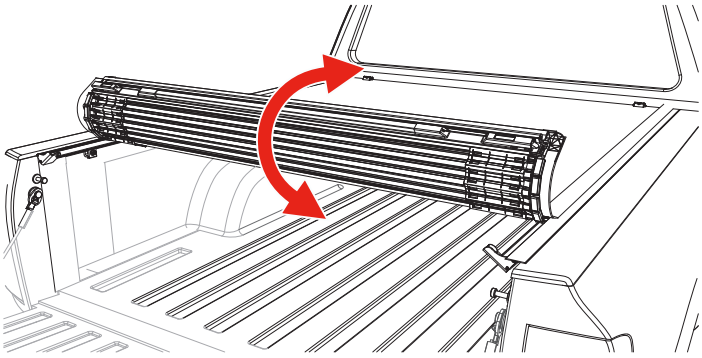

16 Align the front vinyl edge of the cover (E) with the front edge of the cover rails (not the rubber seal).

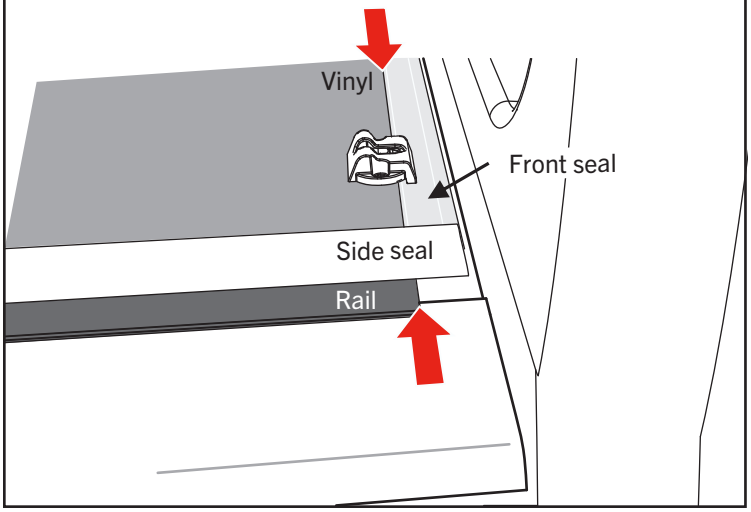

17 Verify that a gap of approximately 1/8" (3.2mm remains on both sides of the cover (E), between the edge of the cover rail and the rolling cover. This spacing is necessary to ensure that the locking rail secures to the cover. Align the cover side to side if the side gaps are not even. Firmly hand tighten the knobs (H) after the cover has been aligned.

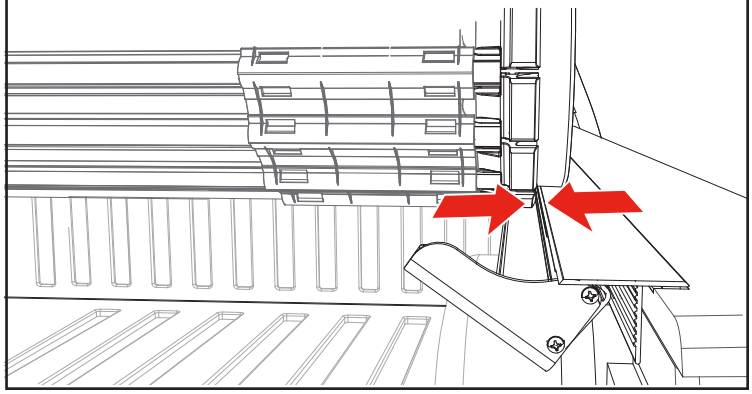

18 When correctly installed, the vinyl edges of the cover (E) will align squarely with the cover rails in all four corners. The latch assembly will align with the rail locking levers at the tailgate on both sides.

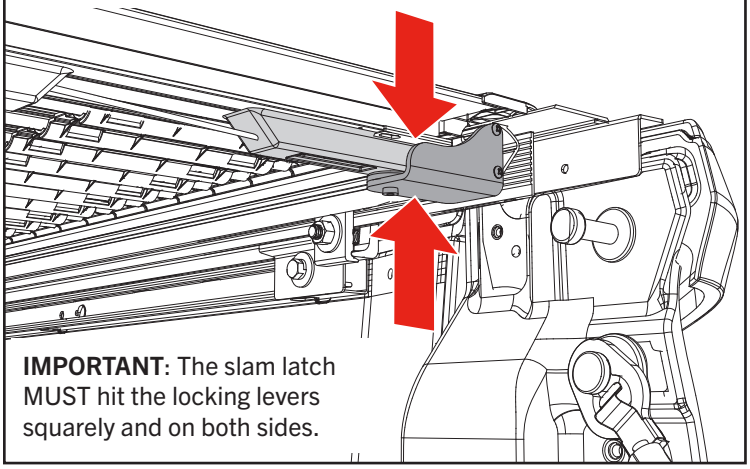

IMPORTANT: The slam latch MUST hit the locking levers squarely and on both sides.

19 Check to see that the latches on both sides at the tailgate fully engage the cover rails. Loosening the knobs (I) and making the side to side adjustment as in step 8 could help with the latch striker engagement.

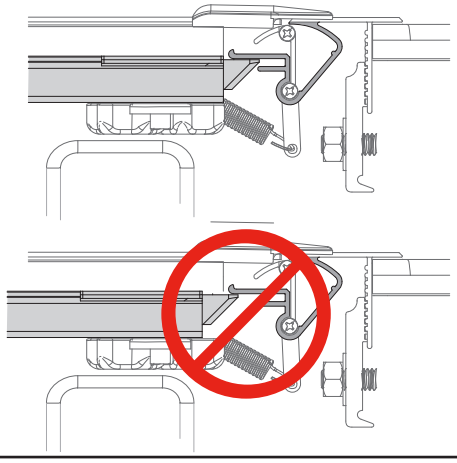

20 When the rolled cover (E) is properly aligned, roll it open, ensuring not to misalign while opening. Tighten the knobs (I) on both sides to secure the cover. **DO NOT overtighten.** Hand tighten only. Recheck that the cover operates correctly. Close the cover and check that the locking levers are engaged and prevent the hard rolled cover from being lifted on both sides.

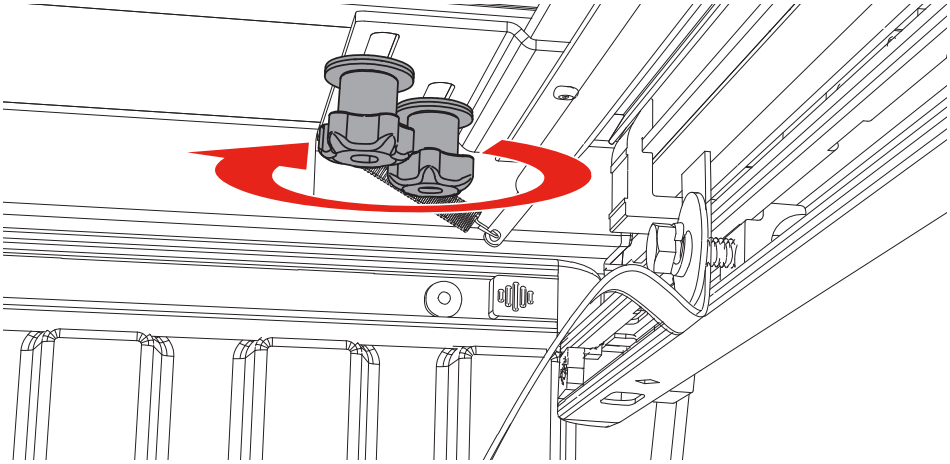

21 When the cover (E) is in the open position, the other end of the strap clamp assembly (F) inserts into the cover clasp and turns to lock. Pull up on the strap end to tighten. **Always hook the straps on BOTH sides.**

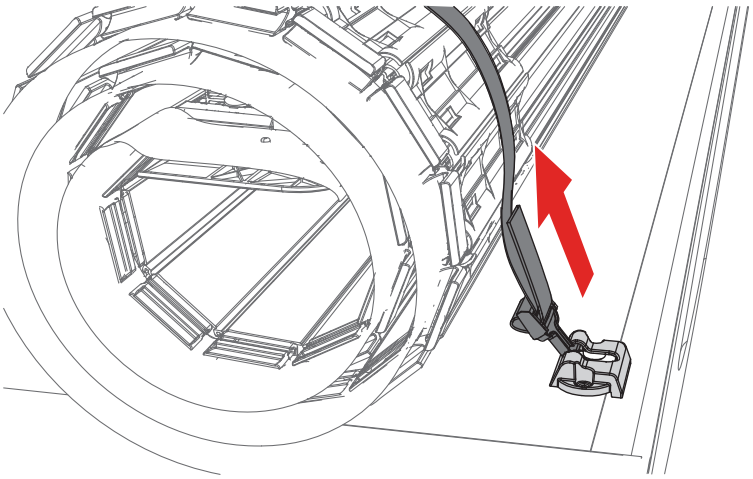

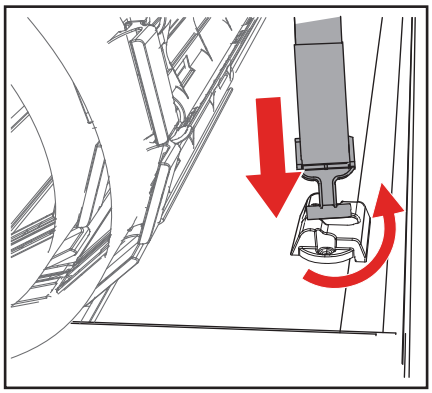

22 With the cover (E) rolled open, install the four D-shaped bumpers (M) to the cover slats. Clean the surface where the seal will go with soap and water to remove dirt and debris. Then clean the same area with isopropyl alcohol to remove wax or grease and to evaporate any remaining water. Allow the surface to dry. Position the bumpers so that they prevent the cover from contacting the cab. The straps will secure the cover away from the cab and glass. Peel the backing paper from the seal and apply pressure to the entire seal to make sure that the adhesion is good.

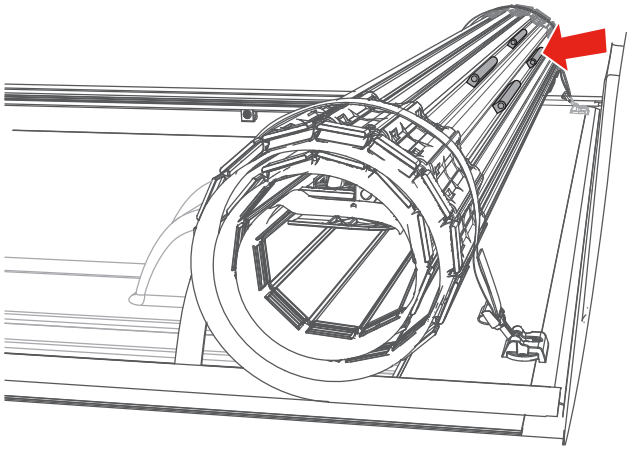

23 Install one end cap (C) on the rearward portion ONLY of the new passenger side cover rail (A), as shown. Tighten the set screw with the provided Allen wrench. Do this also on the new driver side cover rail (B).

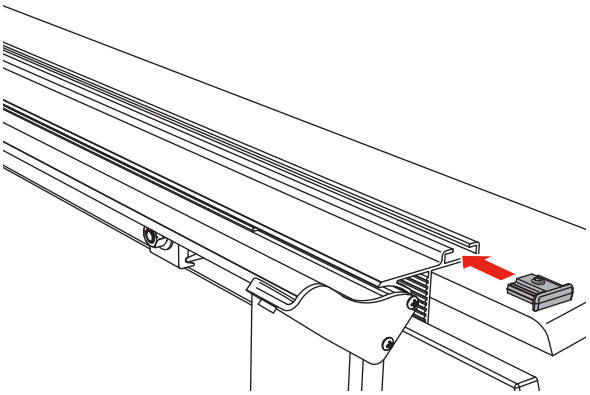

ROLLED UP POSITION: To drive with the cover (E) in the open position, use the strap clamps. Roll the cover forward, twist and insert the clips into the cover clasps. Ensure that **BOTH** strap clamps are fully inserted into the clasps. Pull on the end of the strap to tighten.

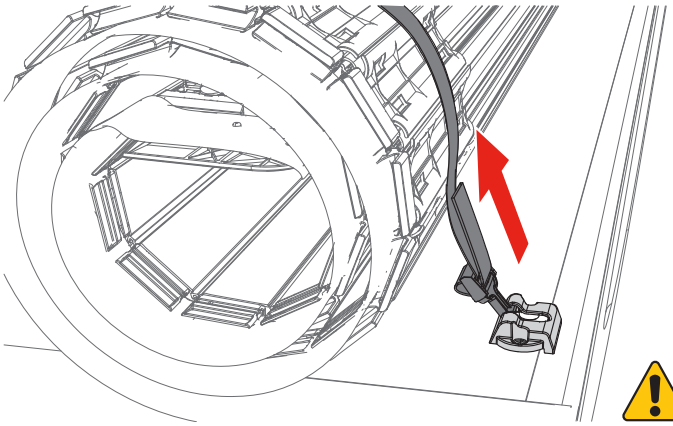

CLOSING COVER: Roll the cover (E) toward the tailgate and rotate the tail rail downwards toward the rotating locking levers.

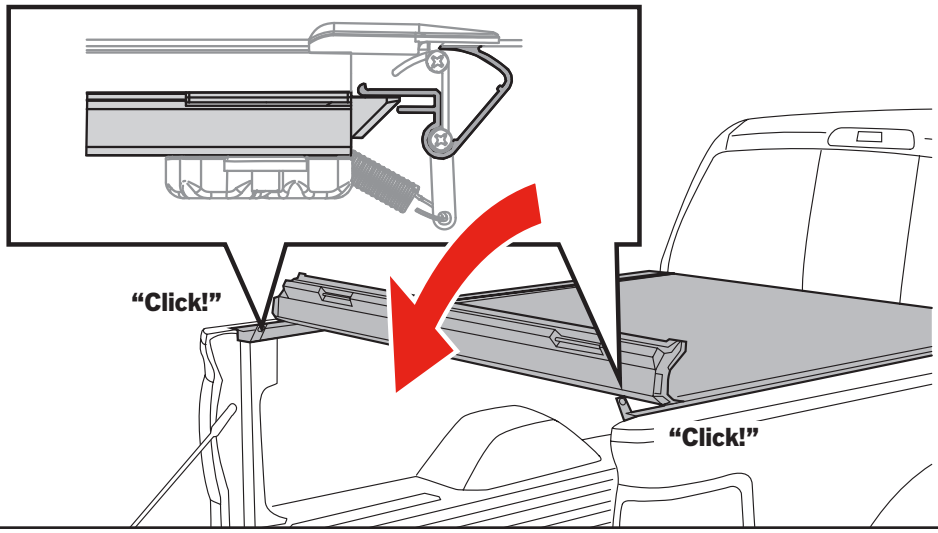

OPENING COVER: Pull down on the latch release cable located on either side of the cover (E) and rotate the tail rail forward and into a rolling motion. When driving with the cover open, the cover must be rolled toward the cab and secured with **BOTH** strap clamps.

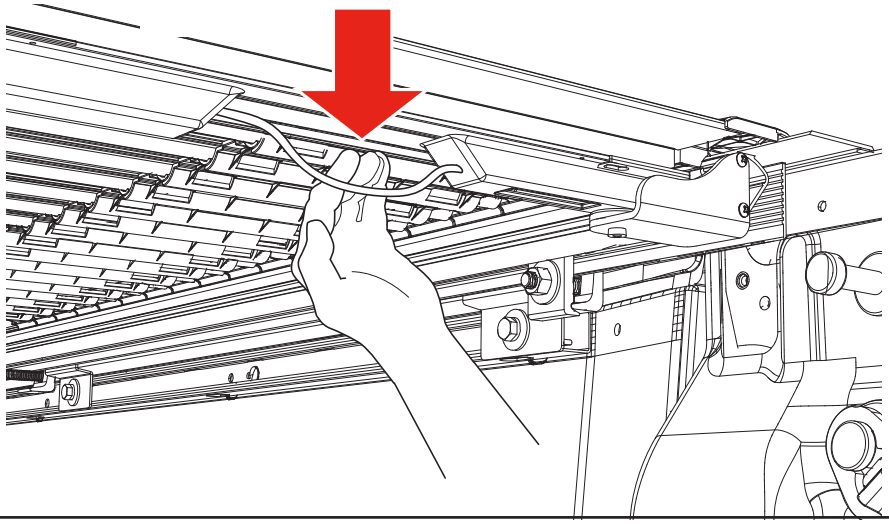

CARE AND MAINTENANCE

The truck bed cover requires occasional cleaning with mild automotive soap and water only. Avoid using abrasive cleaners as they may dull the finish. Some chemicals and fluids such as insect repellents, oils, solvents, and lubricants could potentially damage the rubber hinges and seals and void the warranty.

CAUTION

Always read the ingredients of any product you are using to clean your truck bed cover. Make sure that you use only products that are safe for use with rubber. Many cleaners contain chemicals that could permanently discolor or damage your hinges and seals.

Periodically check that your cover is securely attached to your truck bed and working as intended. Inspect all hardware such as clamps and cover retainer clamps to ensure they are properly installed and working as intended. Covers that are used at high frequency or subject to rough roadways and/or heavy vibration conditions may cause the cover to require adjustment.

It is also recommended that you regularly inspect and service each panel latch. Clean away any excess dirt or grime. Ensure all latches move freely in and properly engage the side rail to provide optimal performance and security.

SAFETY INSTRUCTIONS

- DO NOT place objects on or against cover or framework.
- DO NOT tie cargo to truck bed cover or framework.
- DO NOT operate vehicle with objects on top of the cover.
- NEVER allow children or pets to occupy the truck bed with the cover in the fully closed position.
- The cover is not airtight. Special care is required to keep cargo clean and dry.
- Truck bed covers will not prevent theft of contents inside the truck bed.

TROUBLESHOOTING TIPS

Leaning Rails: Improper engagement of the clamps can cause the rails to appear tilted inward. To ensure the clamps are properly installed loosen the nut. Adjust the clamp(s) until you have full engagement of sections 1 & 2, as shown below.
When the clamp and rail are properly engaged an audible click will be heard. Overtightening the bolt can also contribute to tilted rails. **Do NOT over torque the bolt.**

Water Intrusion: Make sure the retaining clamps are tight and properly engaged to the side rails. Check that the bulkhead seal is in place and the cover is resting on it. Make sure that all latches are engaged to the side rails and adjust if needed. Check that the side rails are installed flush with the top of the bed rail.

Sticking Latch: The cable could be pinched in or under the cable guide extrusion. Loosen the three screws on the center cable cover (bar), located in the middle of the panel. Slightly lift up on the cable guide extrusion. Pull on both sides of the cable.

Wavy Side Seal: The seal may be wavy when removed from the box. Allow ample sunlight for seal to lay flat and relax.

LIMITED WARRANTY

WARRANTY COVERAGE

This truck bed cover is warrantied against defects in materials or workmanship as follows. This warranty is void if the product has been damaged in an accident, or due to neglect, unforeseeable use, improper installation, improper servicing, or other cause not arising out of defects in material or workmanship.

The truck bed cover carries a limited warranty for **five (5) years** from the original date of purchase, subject to the terms below.

WARRANTY IS NOT TRANSFERABLE

The warranty is to the initial owner purchasing the truck bed cover and it is not transferable to a subsequent end user. Proof of purchase may be required to enforce these warranty rights.

WARRANTY CONDITIONS

Failure to follow care and use instructions will void the warranty.

- Clean with mild automotive soap and water only.
- Cover must be secured at all points when vehicle is in motion.
- Check all clamps and retention mechanisms for tightness after a week of driving following installation (or re-installation) of the cover and periodically thereafter.
- Before opening, the cover must be free of all foreign materials including snow and ice.
- Do NOT tow your vehicle from the rear with the cover on your vehicle. If towing from the rear is required, the cover MUST be removed from the vehicle and properly stored.

WARRANTY PERFORMANCE

If all warranty conditions are met, a defective truck bed cover or hardware component will either be repaired or replaced (at our option). We reserve the right, for any warranty, to substitute a newer model or bed cover having similar form and function, to offer a warranty discount on an entire replacement system, and/or provide remedies other than those mentioned in this document.

WARRANTY RETURN

A Return Material Authorization number must be obtained from our Customer Service Department prior to returning any product. We may require the original item to be returned postage prepaid for final determination. Shipping charges will apply for any repair or replacement. Other than postage or shipping charges, no charge will be made for repair or replacement under this warranty.

This warranty gives you specific legal rights. As an owner, you may also have additional rights and remedies under the laws of your state.

WARRANTY REGISTRATION

Warranty registration must be on file and/or proof of original purchase (detailed and dated receipt) required for warranty to be effective.

https://realtruck.com/bak-warranty

REGISTER YOUR WARRANTY ONLINE