TOYOTA TACOMA 24+

REVOLVER X2 & X4
INSTALLATION SHEET

CUSTOMER SERVICE
PHONE: 818-365-9000, Mon-Fri 8:30 am - 6:00 pm EST
EMAIL: support@bakindustries.com

NOTE: It is important that all the areas where the bed cover mounts to the truck are clean and free of debris before installation.

IMPORTANT: You MUST have cargo rails for this product to work.

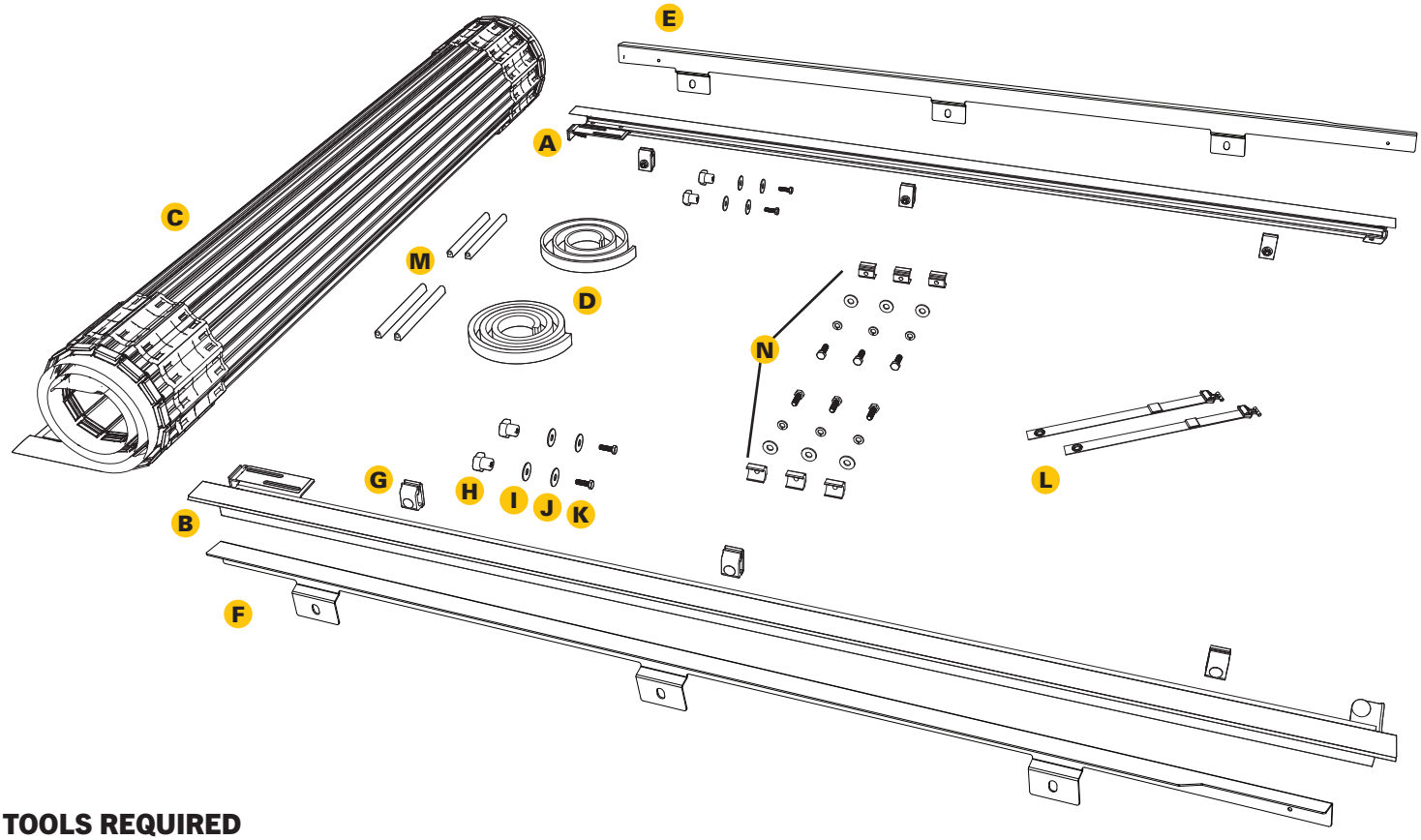

TOOLS REQUIRED

- 9/16” Wrench or socket
- Isopropyl alcohol
- 1/2” Wrench or socket

TOOLS RECOMMENDED

- Torque wrench
- Blow dryer or heat gun

PARTS INCLUDED IN YOUR KIT

- **A** 1x Passenger side cover rail
- **B** 1x Driver side cover rail
- **C** 1x Rolled cover
- **D** 2x Bulkhead seals
  (1x 1/4” & 1x 3/4” thick)
  (1x 1/4” & 1x 1/4” thick)
- **E** 1x Passenger side adaptor rail
- **F** 1x Driver side adaptor rail

HARDWARE BAG INCLUDES

- **G** 6x Clamps
- **H** 4x Lock knobs
- **I** 4x Large flat washers
- **J** 4x Rubber washers
- **K** 4x Mounting bolts
- **L** 2x Strap clamps
- **M** 4x D-shaped bumpers
- **N** 6x T-nut kits

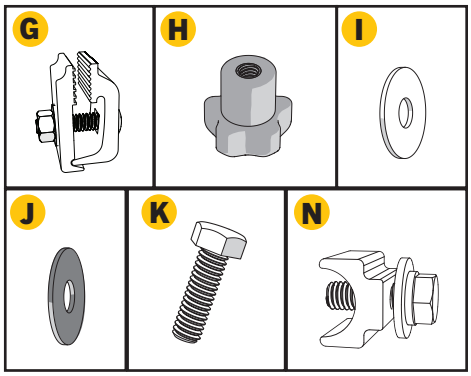

⚠ IMPORTANT

READ BEFORE YOU BEGIN INSTALLATION

IT IS CRITICAL FOR YOUR SAFETY THAT YOU CAREFULLY READ AND FOLLOW THE SAFETY CAUTIONS AND INSTALLATION INSTRUCTIONS BOTH PRIOR TO AND DURING INSTALLATION.

USER SAFETY CAUTION

During installation, be mindful of the potential for sharp edges on the product or vehicle. Taking proper safety precautions helps ensure a safe and smooth installation process.

Always wear protective gloves and handle components with care to reduce the risk of injury.

TEMPERATURE SURFACE CAUTION

During high temperatures or extended sun exposure, surfaces of this product may become hot to the touch, posing a risk of burns or injury. Use caution when handling the product in hot weather and allow time for it to cool before contact.

Always check surface temperature before use to ensure safe handling conditions.

FASTENER TORQUE CAUTION

All fasteners must be tightened to the specified torque values provided in the installation instructions to ensure proper fit and safe operation of the tonneau cover. Under- or over-tightening can lead to product failure, potential damage to your vehicle, injury, or safety hazards while driving.

Always use a calibrated torque wrench and follow the specifications in the installation instructions.

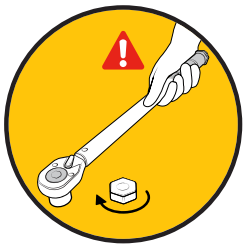

PINCH POINT SAFETY CAUTION

This tonneau cover may create pinch points when closing or operating near solid surfaces such as the truck bed rails or tailgate. To prevent injury, keep hands, fingers, and other body parts clear of moving parts during operation.

Always operate the cover slowly and with caution to ensure safe and proper use.

ENTRAPMENT SAFETY WARNING

This tonneau cover does not feature a manual release mechanism from inside the truck bed. To prevent the risk of entrapment, never allow anyone to be inside the bed of the truck when the cover is closed.

Always ensure the area is clear before closing the cover, and keep the cover securely latched when not in use to avoid accidental closure.

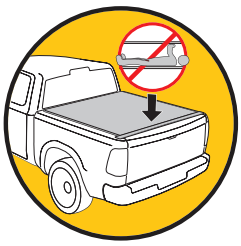

COVER ATTACHMENT WARNING

A partially rolled up or unsecured cover may detach during transit, risking vehicle or property damage and personal injury.

Always verify the tonneau cover is properly secured before operating the vehicle.

CARGO TRANSPORT WARNING

When transporting cargo that is taller than the truck bed, the cover must be fully rolled open and securely fastened with both retainer straps. An unsecured cover can detach while driving, risking vehicle or property damage and personal injury.

Never operate the vehicle with a partially rolled up cover.

COVER POSITION WARNING

Before operating the vehicle, always verify the tonneau cover is either fully rolled open and secured with both T-hook buckles or fully rolled closed and securely latched down.

Never operate the vehicle if the tonneau cover is not properly secured.

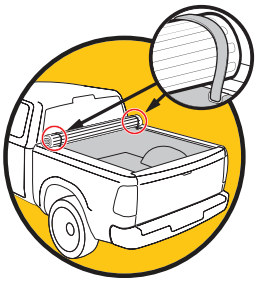

1 Remove the factory end cap from the cargo rail. Insert three T-nuts from the T-nut kits (N) into the end of the cargo rail and then put the end cap back in. Repeat on the driver side.

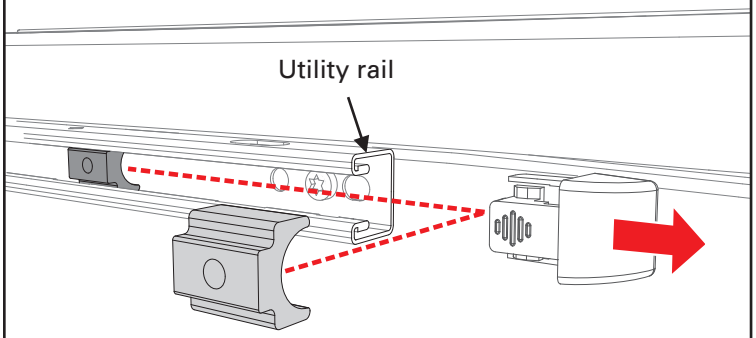

2 Install a strap clamp (L) to the passenger side adaptor rail (E) near the front/cab with a T-nut kit (N) (a bolt, lock washer, washer, and t-nut). Position the passenger side adaptor rail (E) about a half an inch from the front/cab. Adjust the t-nut so it is lined up with the hole in the adaptor rail. Do not use the big slotted hole and leave loose at this time.

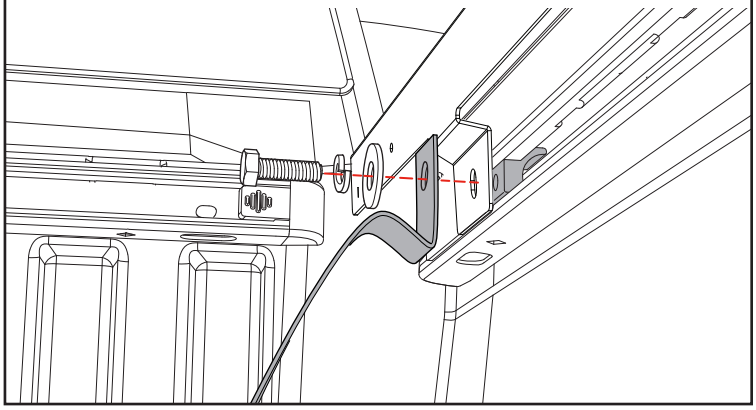

3 Install the rest of the adaptor rail (E) with the T-nut kits (N). Adjust the T-nuts so they are lined up with the holes in the adaptor rail. Do not use the big slotted holes and leave loose at this time. Repeat steps 2-3 on the driver side with the driver side adaptor rail (F).

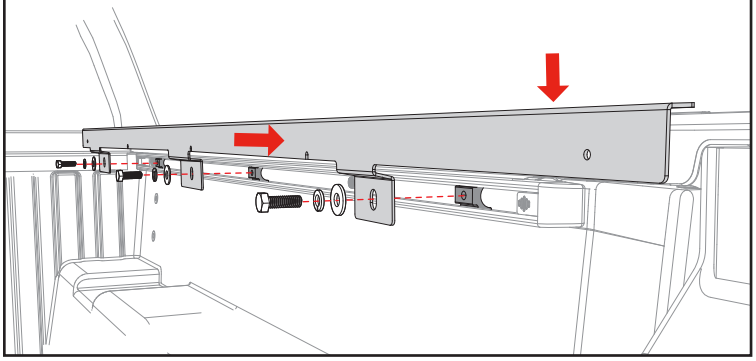

4 After you get the adaptor rail and the T-nut kits lined up, you can now tighten the bolts, while you are applying downward pressure to the rail (E). Tighten to 10 ft/lbs of torque with a 1/2" wrench or socket. A second set of hands may help. Repeat on the opposite side with the passenger side adaptor rail (F).

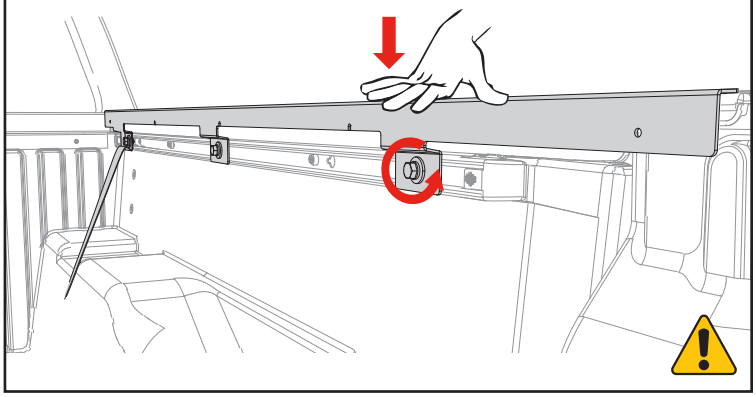

5 Install the bulkhead seal. Clean the top of the bulkhead where the seal will go with soap and water to remove dirt and debris. Then clean the same area with isopropyl alcohol to remove wax or grease and to evaporate any remaining water. Allow the surface to dry. The seal should be placed flush with the front edge of the bulkhead and should be snug between the truck bed rails. Peel the backing paper from the bulkhead seal (D) and apply pressure to the entire seal to make sure that the adhesion is good. If the truck **DOES NOT** have a drop-in bedliner, use the 3/4" seal. If the truck **DOES** have a drop-in bedliner, use the 1/4" seal.

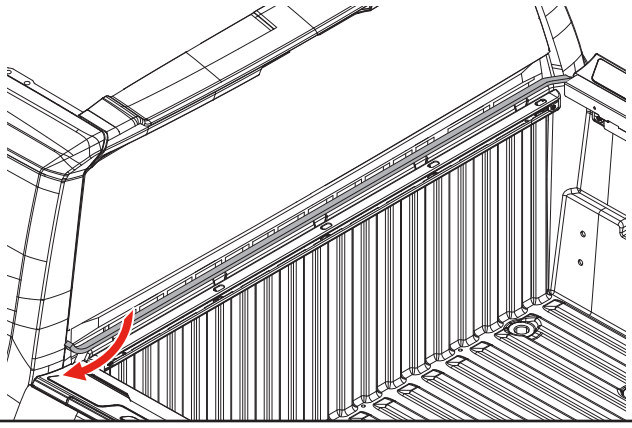

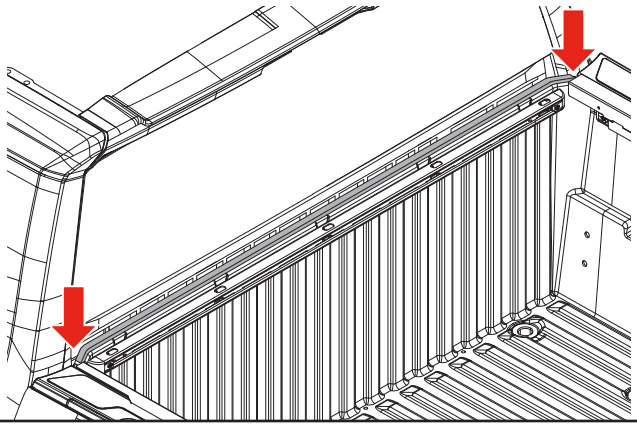

6 Position the passenger side cover rail (A) on the adaptor rail with the slotted bracket pushed all the way toward the front/cab and touching the cargo rail. If the truck is equipped with a drop-in bedliner, remove the foam pads located at the front of the slotted brackets.

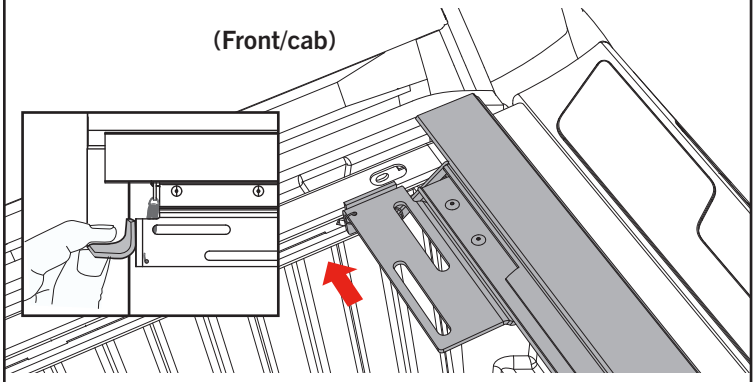

NOTE: Some drop-in bedliners may require trimming in the corners to fit the rail into the opening.

7 Position the first clamp (G) close to the front flange of the adaptor rail (E). Make sure the cover rail (A) is clamped square and level. Hand tighten to 10 ft/lbs of torque with a 9/16" wrench or socket.

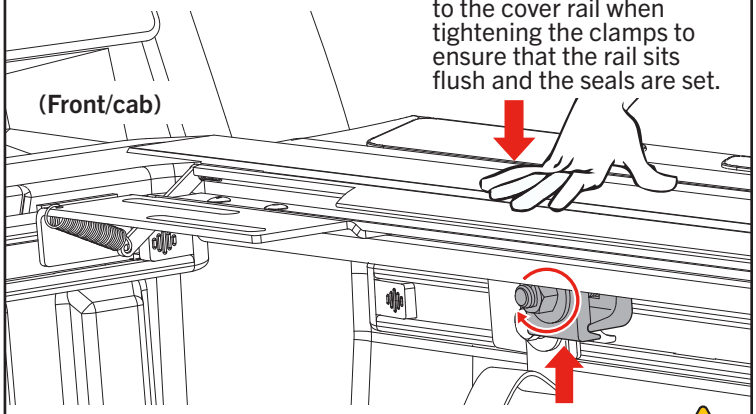

CAUTION: Overtightening the clamps could cause warping of the bed cap.

8 Position the center clamp (G) close to the center flange of the adaptor rail (E). Make sure the cover rail (A) is clamped square and level. Hand tighten to 10 ft/lbs of torque with a 9/16" wrench or socket

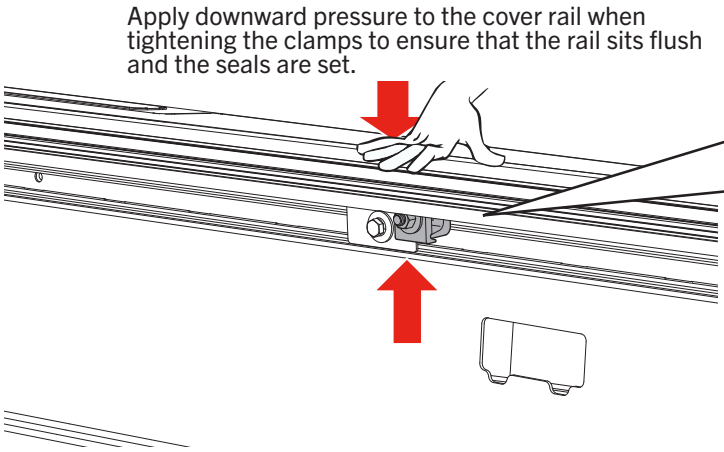

NOTE: When installing EVERY clamp, make sure that the clamps are inserted as far up onto the rail as possible and that the clamp teeth fit squarely and fully engage the ribs of the cover rail.

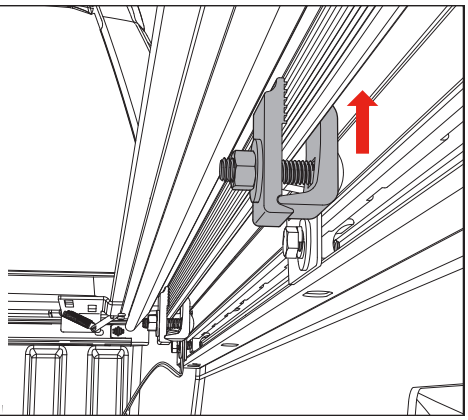

CAUTION: Overtightening the clamps could cause warping of the bed cap.

9 Position the rear clamp (G) close to the rear flange of the adaptor rail (E). Make sure the cover rail (A) is clamped square and level. Hand tighten to 10 ft/lbs of torque with a 9/16" wrench or socket. **Repeat steps 6-9 with the driver side rail (B).**

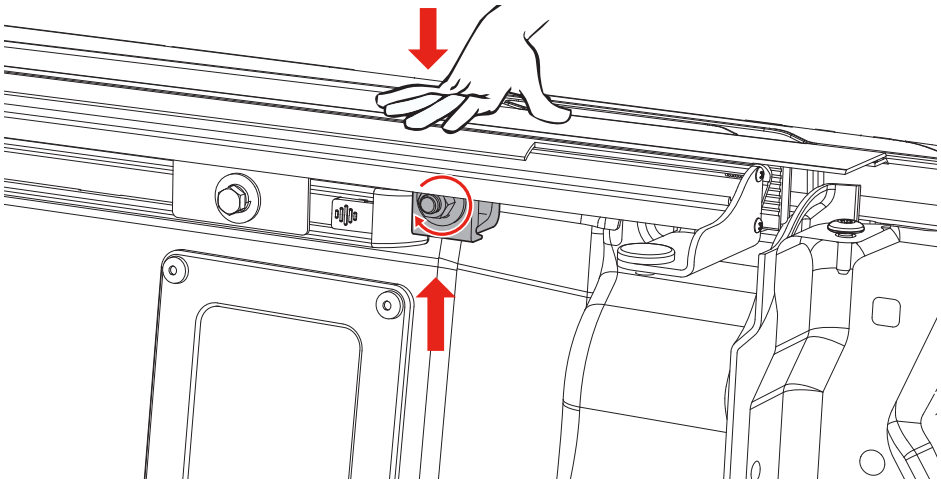

Apply downward pressure to the cover rail when tightening the clamps to ensure that the rail sits flush and the seals are set.

CAUTION: Overtightening the clamps could cause warping of the bed cap.

10 With both rails (A & B) clamped in place, rest the rolled cover (C) onto the rails at the cab, roll the cover toward the tailgate, remove and discard all packaging materials. Fold the front panel back and insert the two mounting bolts (J) into the two slots, do this for both sides. The bolts will align with the slotted bracket of the cover rail (A & B). Fold the panel back down.

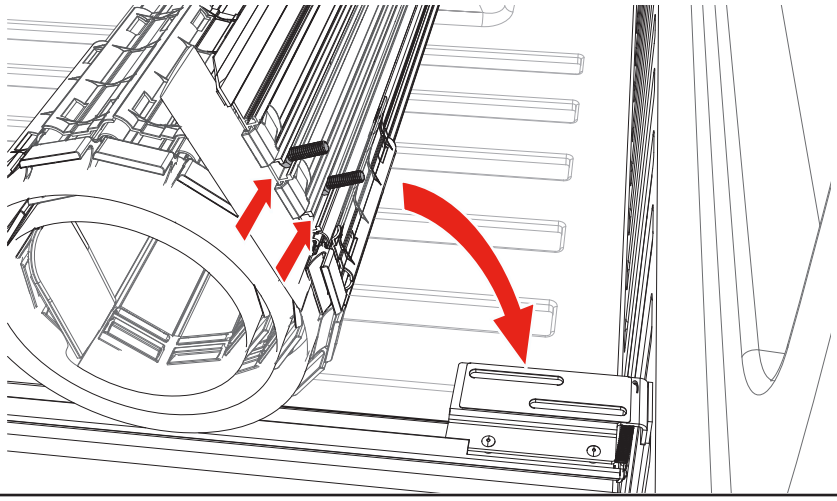

11 Install the mounting hardware loosely underneath the slotted bracket on the passenger cover rail (A). Start with the rubber washers (J), then the large flat washers (I), then hand tighten the knobs (H). Repeat on the driver side . Leave the knobs loose for now.

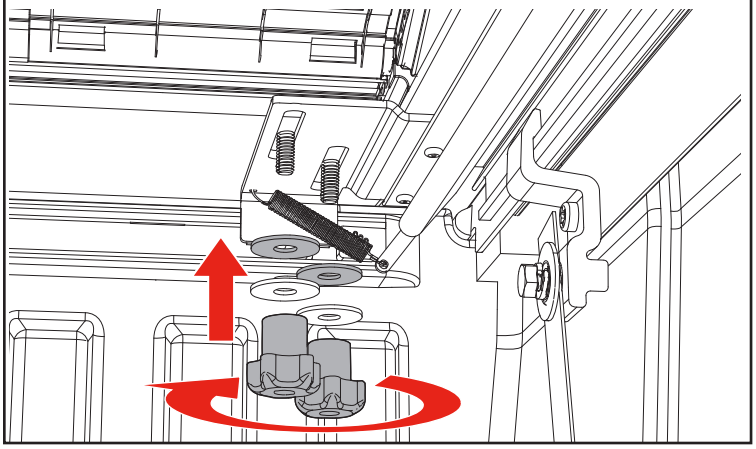

12 Open and close the cover (C) several times to verify that it rolls freely. The cover should be square with the cover rails and roll freely between the rails.

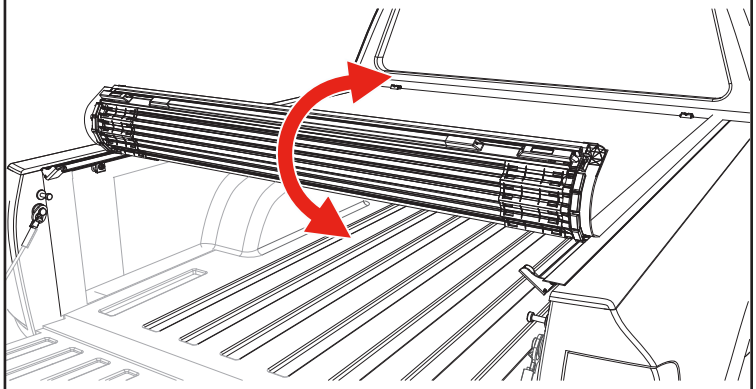

13 Align the front vinyl edge of the cover (C) with the front edge of the cover rails (not the rubber seal).

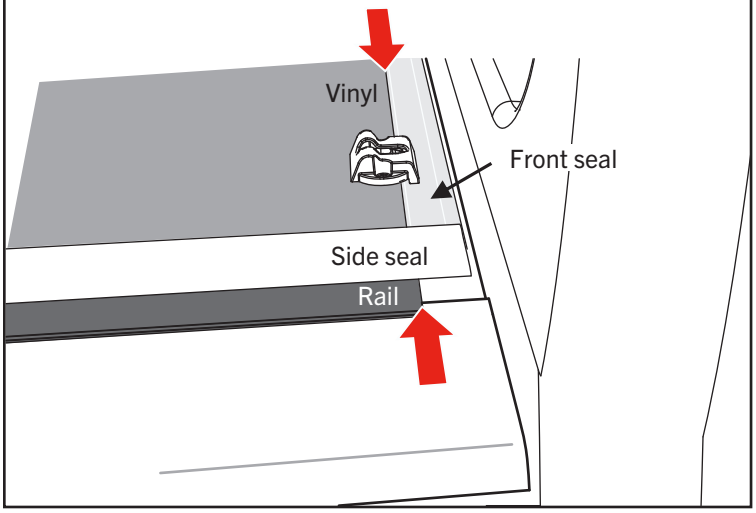

14 Verify that a gap of approximately 1/8" (3.2mm) remains on both sides of the cover (C), between the edge of the cover rail and the rolling cover. This spacing is necessary to ensure that the locking rail secures to the cover. Align the cover side to side if the side gaps are not even. Firmly hand tighten the knobs (H) after the cover has been aligned.

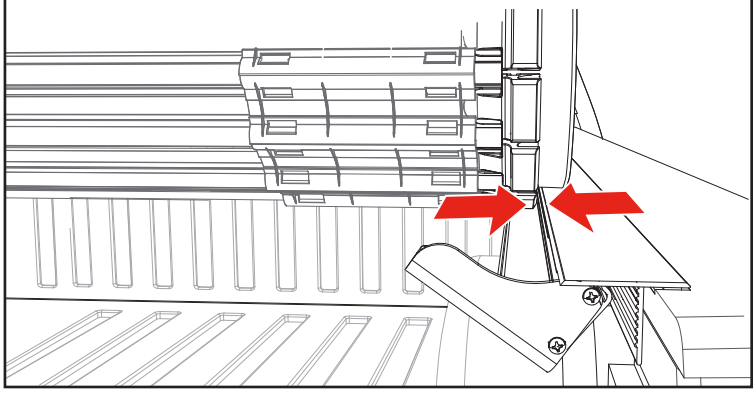

15 When correctly installed, the vinyl edges of the cover (C) will align squarely with the cover rails in all four corners. The latch assembly will align with the rail locking levers at the tailgate on both sides.

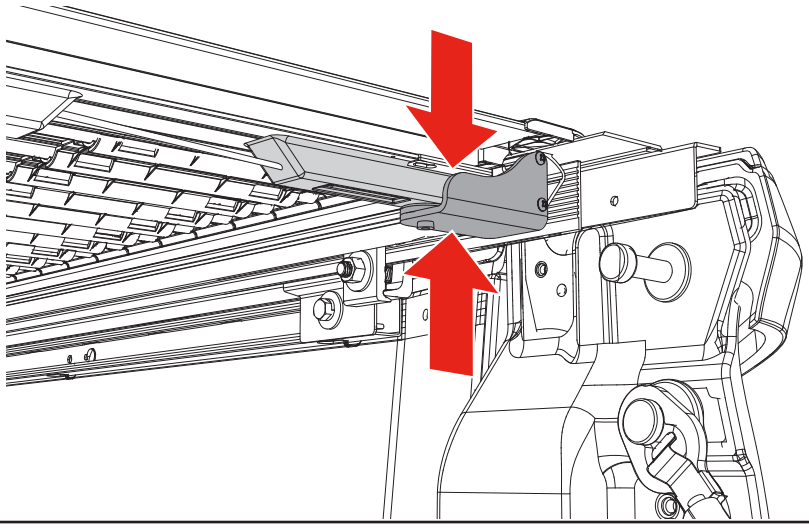

Important: The slam latch MUST hit the locking levers squarely and on both sides.

16 Check to see that the latches on both sides at the tailgate fully engage the cover rails. Loosening the knobs (H) and making the side to side adjustment as in step 15 could help with the latch striker engagement.

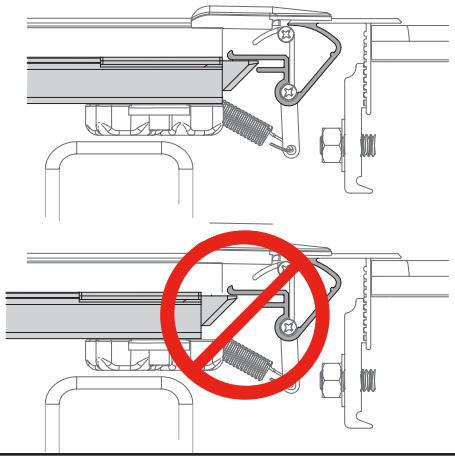

17 When the cover (C) is properly aligned, roll it open, ensuring not to misalign while opening, and tighten the knobs (H) on both sides to secure the cover. **DO NOT overtighten.** Hand tighten only. Recheck that the cover operates correctly. Close the cover and check that the locking levers are engaged and prevent the cover from being lifted on both sides.

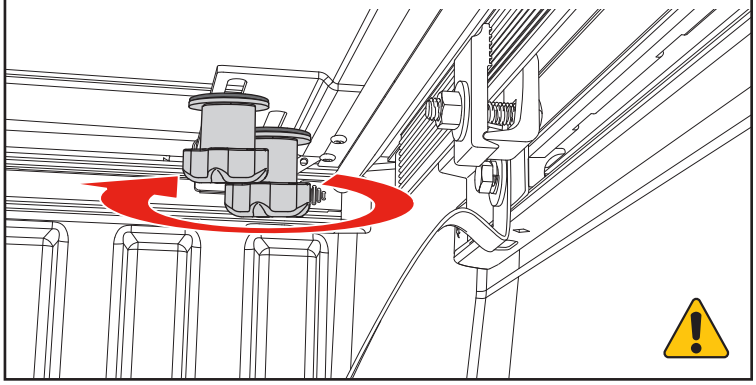

18 With the cover (C) rolled open, install the four D-shaped bumpers (M) to the cover slats. Clean the surface where the seal will go with soap and water to remove dirt and debris. Then clean the same area with isopropyl alcohol to remove wax or grease and to evaporate any remaining water. Allow the surface to dry. Position the bumpers so that they prevent the cover from contacting the cab. The straps will secure the cover away from the cab and glass. Peel the backing paper from the seal and apply pressure to the entire seal to make sure that the adhesion is good.

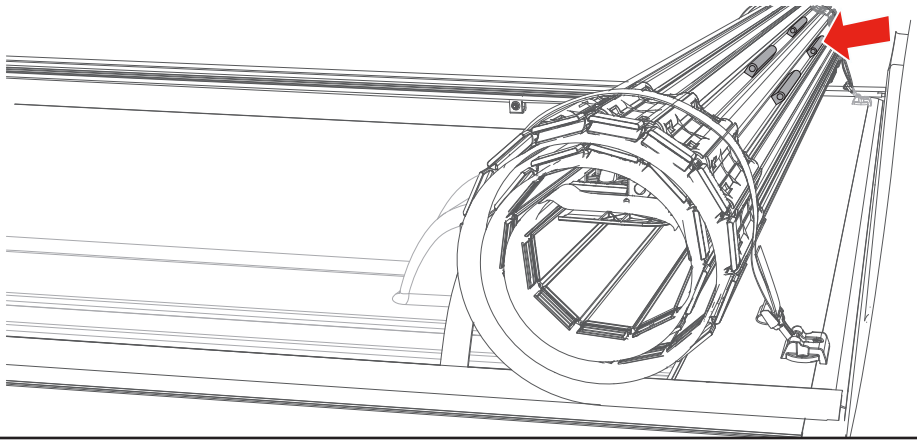

19 If the side seals of the cover appear wrinkled, exposure to the sun will assist the seals to lay flat. Applying heat with a hair dryer or carefully with a heat gun will also smooth the seals.

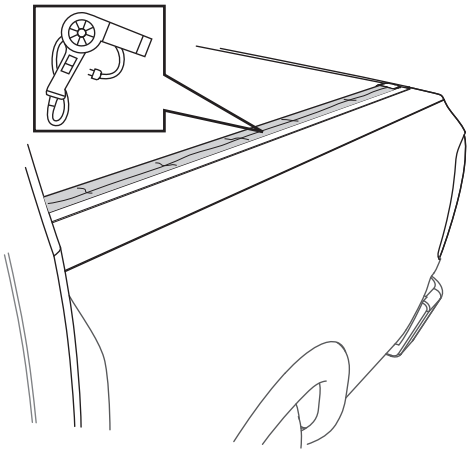

ROLLED UP POSITION: To drive with the cover (C) in the open position, use the strap clamps. Roll the cover forward, twist and insert the clips into the cover clasps. Ensure that BOTH strap clamps are fully inserted into the clasps. Pull on the end of the strap to tighten.

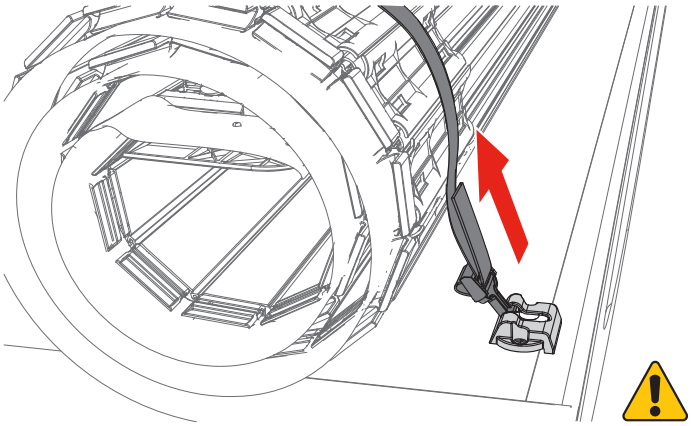

CLOSING COVER: Roll the cover (C) toward the tailgate and rotate the tail rail downwards toward the rotating locking levers.

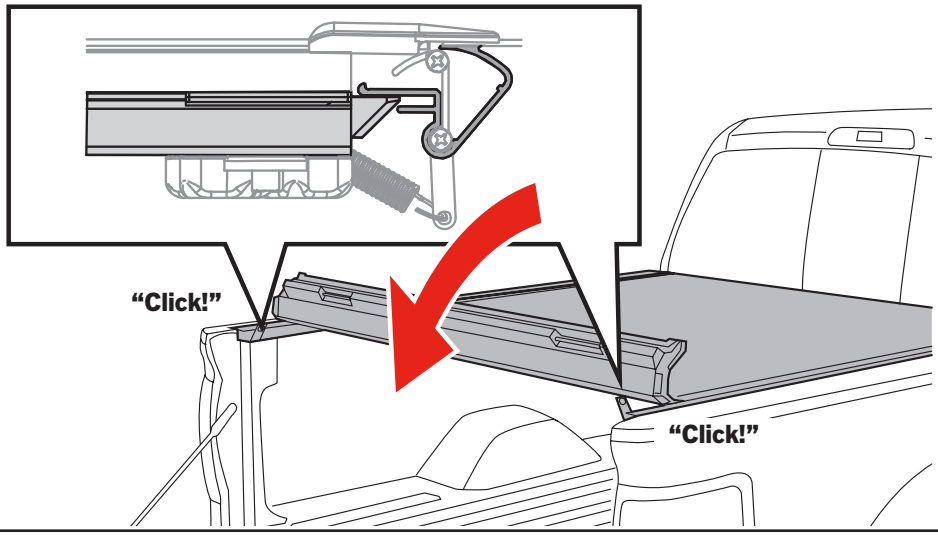

OPENING COVER: Pull down on the latch release cable located on either side of the cover (C) and rotate the tail rail forward and into a rolling motion. When driving with the cover open, the cover must be rolled toward the cab and secured with BOTH strap clamps.

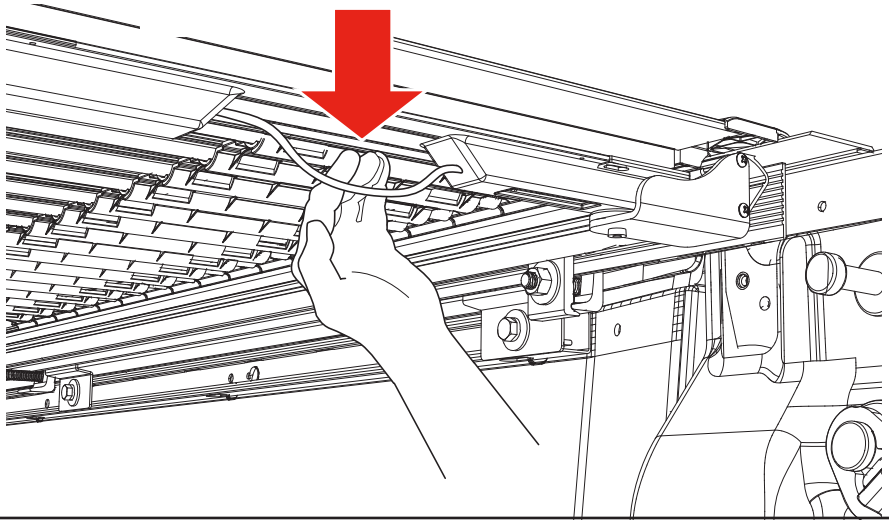

CARE AND MAINTENANCE

Revolver tonneaus are made from durable materials and require simple care to ensure a long life of performing well and looking great.

Cleaning the top (washing)

Standard automotive soap and water with a soft sponge or cloth are recommended for cleaning. Shammy dry to keep the finish polished and brilliant. Wax is NOT recommended as it tends to fill in cracks and crevices, which may affect the textured panel finish. DO NOT use any harsh cleaners or abrasives.

Maintenance

It is recommended that you periodically check your cover is securely attached to your truck bed. Inspect the clamps and front mounting bolts to ensure they were properly installed and have not come loose or knocked out of adjustment during operation. Covers that are used with high frequency or that are subject to the vibrations and impact from rough roadways can cause the cover to require adjustment.

Lubricating the Latches

It is recommended that you periodically inspect and service the latches on each panel. Clean away any excess dirt or grime and lubricate with silicone spray. Ensure the latches move freely in and out to properly engage the side rail and provide proper performance with optimum security. Be careful not to overspray the cover. Wipe away any excess around the latch location.

LIMITED WARRANTY

WARRANTY COVERAGE

This truck bed cover is warrantied against defects in materials or workmanship as follows. This warranty is void if the product has been damaged in an accident, or due to neglect, unforeseeable use, improper installation, improper servicing, or other cause not arising out of defects in material or workmanship.

Revolver X2 - The truck bed cover carries a limited warranty for three (3) years from the original date of purchase, subject to the terms below.

Revolver X4s - The truck bed cover carries a limited warranty for five (5) years from the original date of purchase, subject to the terms below.

WARRANTY IS NOT TRANSFERABLE

The warranty is to the initial owner purchasing the truck bed cover and it is not transferable to a subsequent end user. Proof of purchase may be required to enforce these warranty rights.

WARRANTY CONDITIONS

Failure to follow care and use instructions will void the warranty.

- Clean with mild automotive soap and water only.
- Cover must be secured at all points when vehicle is in motion.
- Check all clamps and retention mechanisms for tightness after a week of driving following installation (or re-installation) of the cover and periodically thereafter.
- Before opening, the cover must be free of all foreign materials including snow and ice.
- Do NOT tow your vehicle from the rear with the cover on your vehicle. If towing from the rear is required, the cover MUST be removed from the vehicle and properly stored.

WARRANTY PERFORMANCE

If all warranty conditions are met, a defective truck bed cover or hardware component will either be repaired or replaced (at our option). We reserve the right, for any warranty, to substitute a newer model or bed cover having similar form and function, to offer a warranty discount on an entire replacement system, and/or provide remedies other than those mentioned in this document.

WARRANTY RETURN

A Return Material Authorization number must be obtained from our Customer Service Department prior to returning any product. We may require the original item to be returned postage prepaid for final determination. Shipping charges will apply for any repair or replacement. Other than postage or shipping charges, no charge will be made for repair or replacement under this warranty.

This warranty gives you specific legal rights. As an owner, you may also have additional rights and remedies under the laws of your state.

WARRANTY REGISTRATION

Warranty registration must be on file and/or proof of original purchase (detailed and dated receipt) required for warranty to be effective.

https://realtruck.com/bak-warranty

REGISTER YOUR WARRANTY ONLINE