Raptor Series

Your satisfaction is important to us, please let us help!

If you have any questions or concerns during the installation, our support representatives are available to assist you.
Please call: 1-877-769-3765 or Live Chat at www.raptorseries.com
If you have damaged or missing parts please contact the company you purchased the product from and notify them of the issue right away.

CAUTION: Do not install damaged parts!!!

Easy Return / Easy Exchange

Want to return an item or exchange? Not satisfied with purchase?
No problem. We strongly believe in service after the sale and we stand behind our products and our service to you, our valued customer. There is no problem we can't solve for you!

Items that have been installed and/or damaged after receipt, are no longer in new and ready-to-sell condition and cannot be refunded, replaced or exchanged unless it has a manufacturer defect or was damaged in shipping. In addition, we cannot accept return on items that are not in the original packaging. Items returned in poor condition or having parts missing will not be credited.

Please note: Your request for return or replacement must be initiated within 30 days of delivery of your merchandise.

Did your order arrive damaged?
Please do not install damaged products. Contact the company you purchased your product from as soon as possible and notify them of the damages. They will make arrangements with you to assist with the problem.

Did you order the wrong part or receive the wrong item?
Don't worry. From time to time human error can result in problems with ordering or shipping. Contact the company you purchased your product from as soon as you notice the error. Every company has their own policy on returning parts that have been ordered incorrectly or shipped incorrectly.

In the event that you need to ship your part back to return/exchange, please ship to the warehouse below:

CYC Returns Warehouse
2415 Cathy Lane
Jasper, IN 47546

Raptor Series Warranty

LIMITED TEN (10) YEAR WARRANTY

For Powder Coated Steel Products

CYC Engineering, Inc. guarantees the original purchaser of our products a limited ten (10) year warranty from the date of original purchase against manufacturer defects in materials, workmanship and finish under normal use. The step pads are covered under warranty for 1 year. This warranty does not include damage resulting from road hazards such as gravel or other debris, product misuse, improper installation, impairments from accidents, product modifications, product neglect or scratches during the life of the product. This limited ten year warranty applies only to new products and is limited to the repair or replacement of company's products. Warranty does not include costs of removal, installation, labor, inconvenience or consequential damages. Original purchaser must return defective merchandise along with the purchase receipt, to the original place of purchase.

LIMITED LIFETIME WARRANTY

For Stainless Steel Products

CYC Engineering, Inc. guarantees the original purchaser of our products a limited lifetime warranty from the date of original purchase against manufacturer defects in materials, workmanship and finish under normal use. The step pads are covered under warranty for 1 year. This warranty does not include damage resulting from road hazards such as gravel or other debris, product misuse, improper installation, impairments from accidents, product modifications, product neglect or scratches during the life of the product. This limited lifetime warranty applies only to new products and is limited to the repair or replacement of company's products. Warranty does not include costs of removal, installation, labor, inconvenience or consequential damages. Original purchaser must return defective merchandise along with the purchase receipt, to the original place of purchase.

GTS30DG/GTS31DG/GTS32DG

MAGNUM RT STEPS

Components:

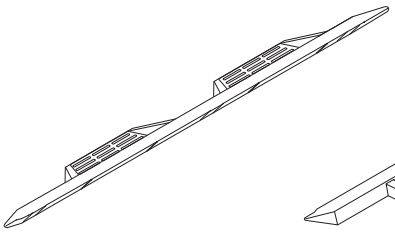

Passenger
Side Step Bar
Qty 1

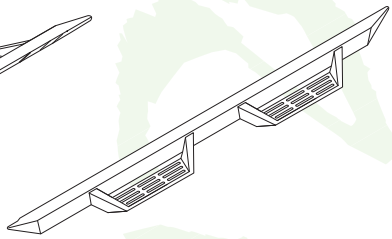

Driver Side
Step Bar
Qty 1

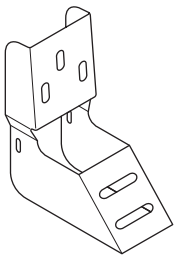

Mounting Brackets
Qty 6

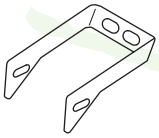

Support Brackets
Qty 6

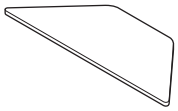

Front Armor Plates
Qty 2

Hardware:

M10 Flat
Washers
Qty 6

M10 Lock
Washers
Qty 6

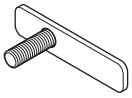

M10 Bolt Plates
Qty 6

M8 Flat
Washers
Qty 34

M8 Lock
Washers
Qty 34

M10 Hex
Head Nuts
Qty 6

M10 Plastic
Push Nuts
Qty 6

M8 Plastic
Push Nuts
Qty 12

M8 Triangle Bolt/
Nut Plates
Qty 6

M8 Hex
Head Nuts
Qty 12

M6 Hex
Head Nuts
Qty 24

M6 Flat
Washers
Qty 48

M6 Lock
Washers
Qty 24

M6 x 20MM Hex
Head Bolts
Qty 12

M6 x 30MM Hex
Head Bolts
Qty 12

Spacers
Qty 8

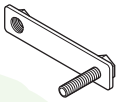

RTSPN175
Bolt/Nut Plates
Qty 6

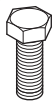

M8 x 30MM
Hex Head Bolts
Qty 12

M8 x 25MM
Hex Head Bolts
Qty 8

Tools Required:

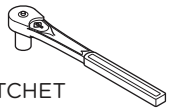

RATCHET

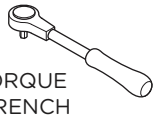

TORQUE
WRENCH

10MM SOCKET

13MM SOCKET

16MM SOCKET

Torque Specifications:
For Rocker Panel Mount Installations
M8 through M12 bolts and nuts are set to 15-20 ft lbs.

Note: When installing the brackets and bars, all hardware must be left loose until all the items are attached.

1. Remove all contents from the package and check steps for any damage. Also, verify that all components and hardware listed above are included before you begin installation.

2. Locate factory holes in six (6) places on the rocker panel.

Note: Ram trucks built after June 1st 2015 may be equipped with a factory reinforcement bracket attached to the inside of the rocker panel. This will need to be removed prior to installation.

Remove all three factory mounting bolts and wire harness held in place with plastic retaining clips and remove bracket from vehicle. Mounting Brackets will serve as the reinforcement to the rocker panel.

3. Remove the tape covering the factory oblong hole in the Rocker Panel located above the two (2) hex holes.

Determine if your truck has threaded inserts in the rocker panel. These holes are located just underneath of the oblong factory hole.

4. If your truck is equipped with the threaded inserts, you will install the Single M10 Bolt Plate.

If your truck is NOT equipped with the threaded inserts, you will install the M8 Triangle Bolt/Nut Plate.

Install the M10 Plastic Push Nut onto the Single M10 Bolt Plate (4a) or the M8 Plastic Push Nut onto the M8 Triangle Bolt/Nut Plate (4b) to ensure it does not fall into the rocker panel during installation.

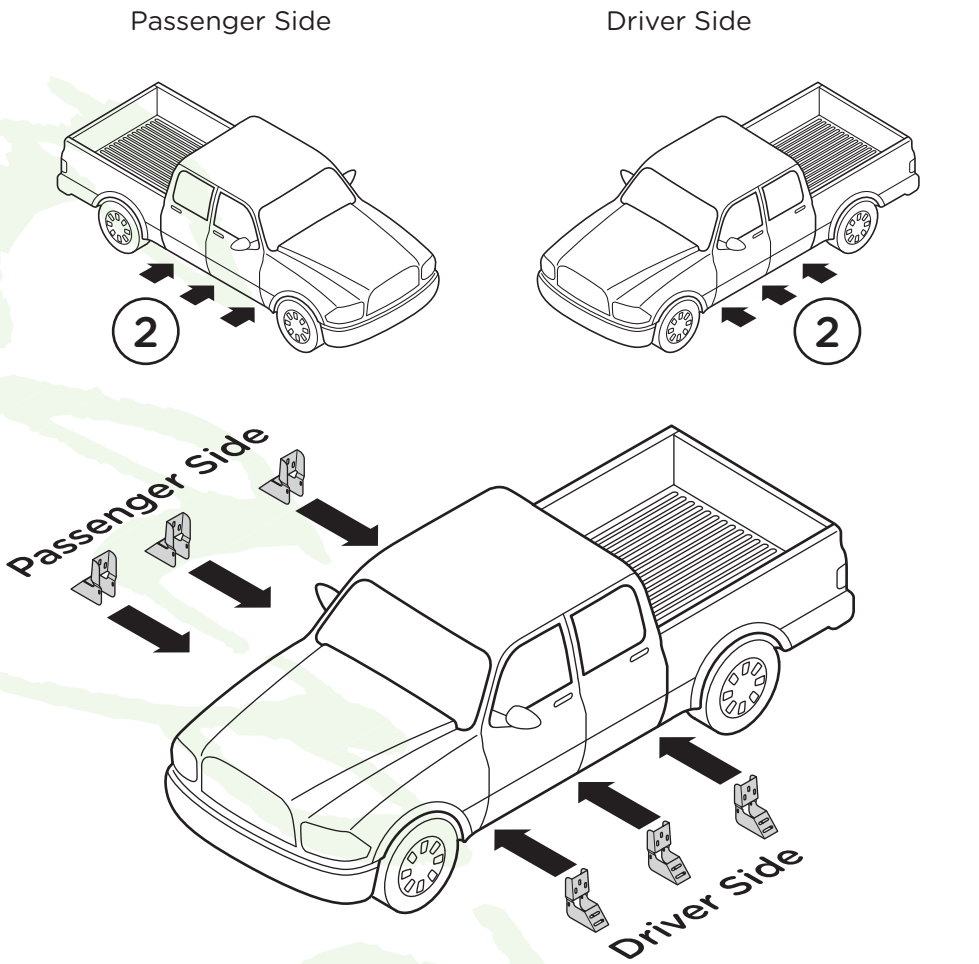

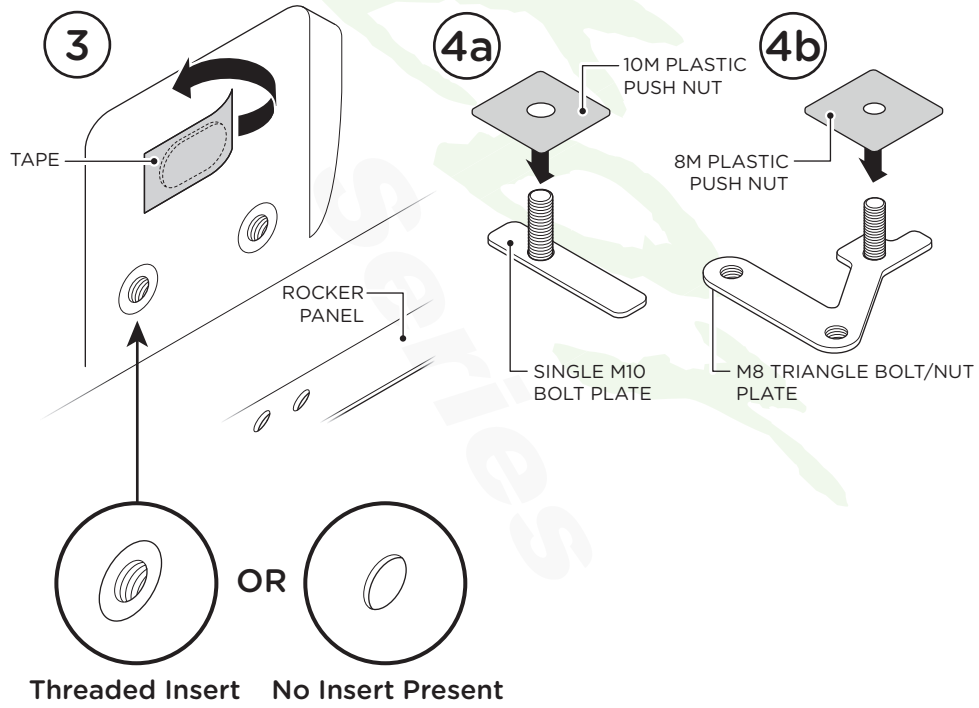

5. Insert either Single M10 Bolt Plate or M8 Triangle Bolt/Nut Plate into the oblong factory hole (5a) with the threaded stud sticking out of the oblong factory hole (5b).

Note: If your threaded holes do not not sit flush with the outside of the rocker panel, you must use one (1) Flat Spacer Plate installed over the M10 Stud to ensure the bracket is level with the rocker panel.

M10 Single Bolt Plate

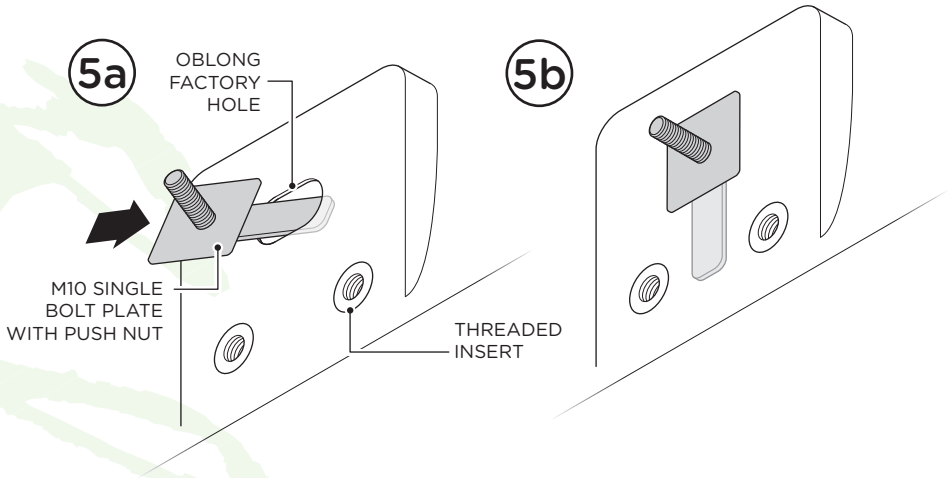

M8 Triangle Bolt/Nut Plate

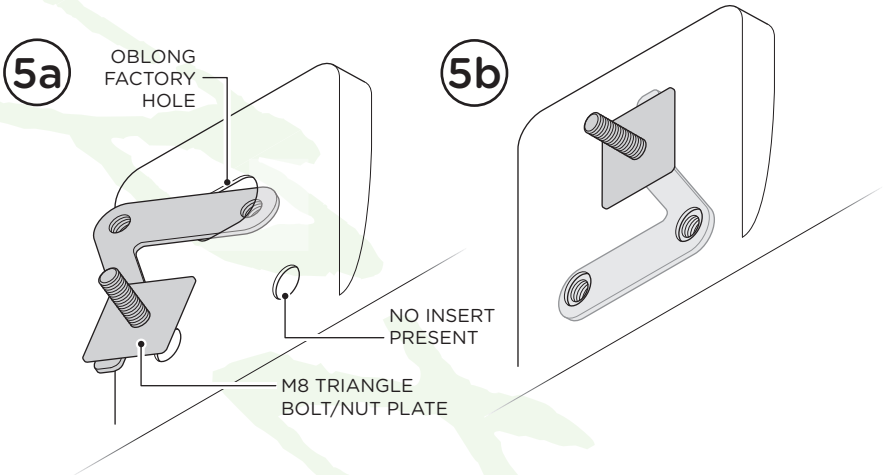

Installing Mounting Brackets

6a. Attach the top mounting point of the Mounting Brackets to the vehicle using M8 or M10 hardware depending on bolt plate used. You will use one (1) Flat Washer, one (1) Lock Washer and one (1) Hex Head Nut per bracket.

6b. Attach the lower mounting points of Mounting Brackets to the vehicle by using two (2) M8 Hex Head Bolts, two (2) M8 Lock Washers and two (2) M8 Flat Washers per bracket.

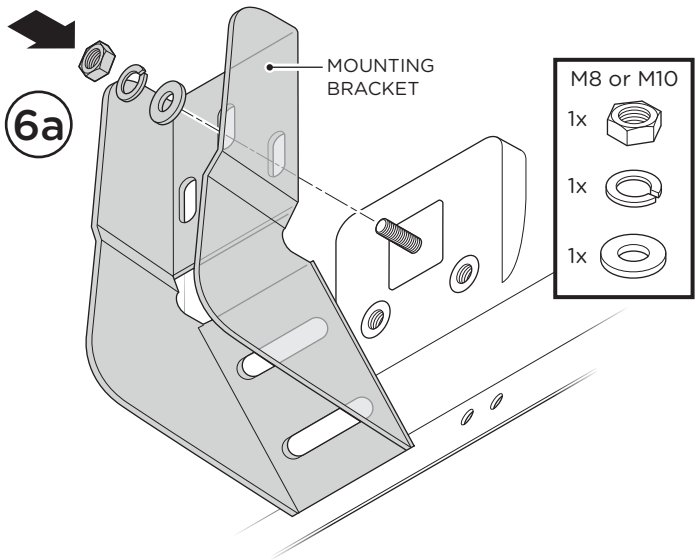

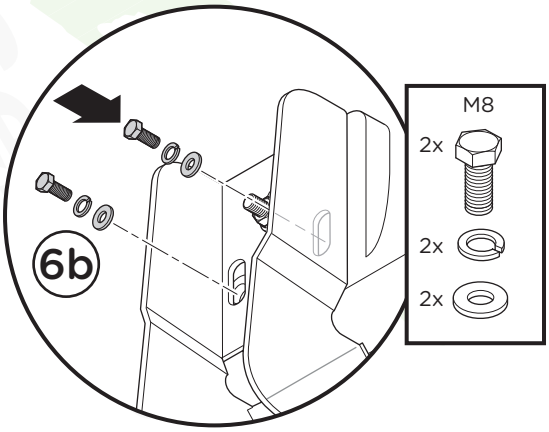

Installing Front/Center Support Braces

9. Line up Support Brackets with the holes in the Mounting Brackets as well as the pre-drilled holes in the pinch weld of the truck.

Attach the Support Brackets to the pinch weld by using two (2) M6x30MM Hex Head Bolts, two (2) M6 Lock Washers, four (4) M6 Flat Washers and two (2) M6 Hex Nuts.

9b. Attach Support Brackets to the Mounting Brackets using two (2) M6x20MM Hex Head Bolts, two (2) M6 Lock Washers, four (4) M6 Flat Washers and two (2) M6 Hex Head Nuts.

Note: If holes do not exist in pinch weld, you may drill these using a 1/4″ drill bit. This is not required but installing Support Brackets will greatly reduce rocker panel flex.

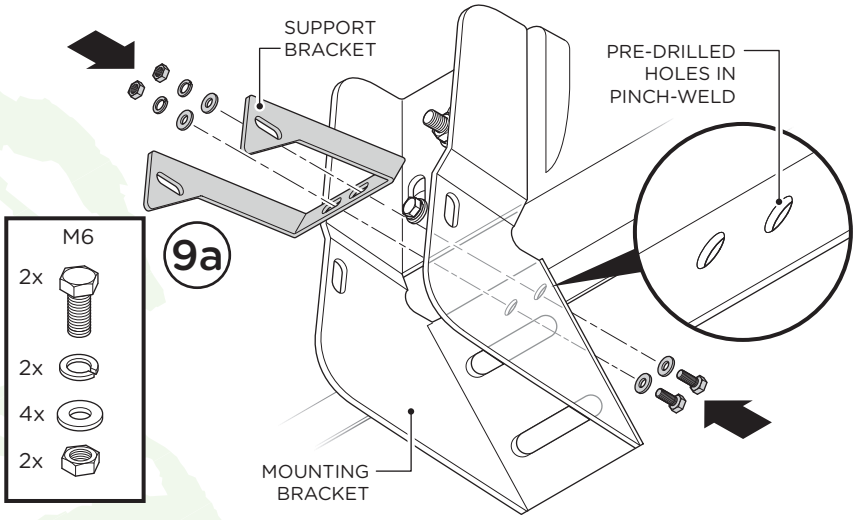

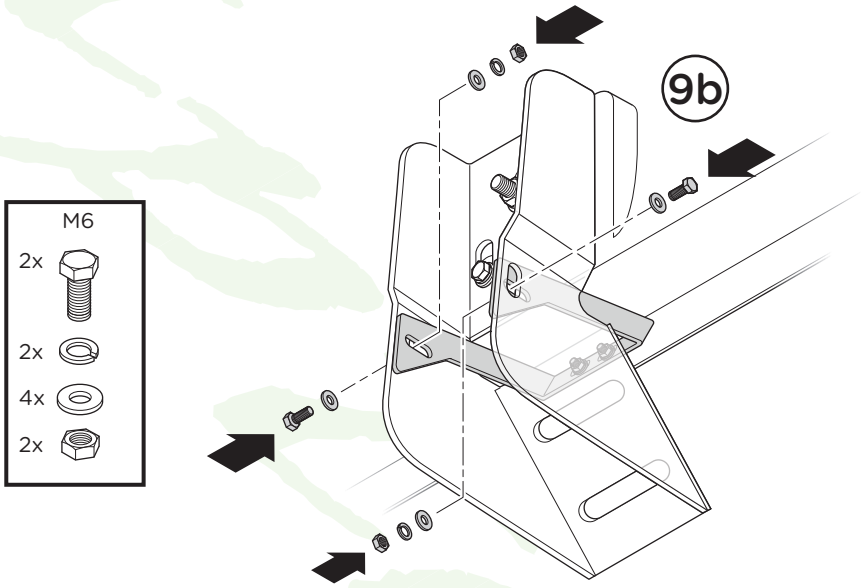

Installing the Step Bar

10. Line up mounting points on the step bar with the mounting holes in each bracket.

Fasten the step bar to each bracket using one (1) RTSPN175 Bolt/Nut Plate, one (1) Plastic Push Nut, one (1) M8 Hex Head Nut, two (2) M8 Lock Washers, two (2) M8 Flat Washers and one (1) M8 x 30MM Hex Head Bolt.

Adjust the bars front/back and up/down to desired placement. Once you have the step positioned, tighten until the split lock washer is flat between the bolt head and flat washer. Do not over tighten.

When all hardware is in place, everything must be tightened. See page 1 for torque specifications. Repeat these steps for opposite side installation.

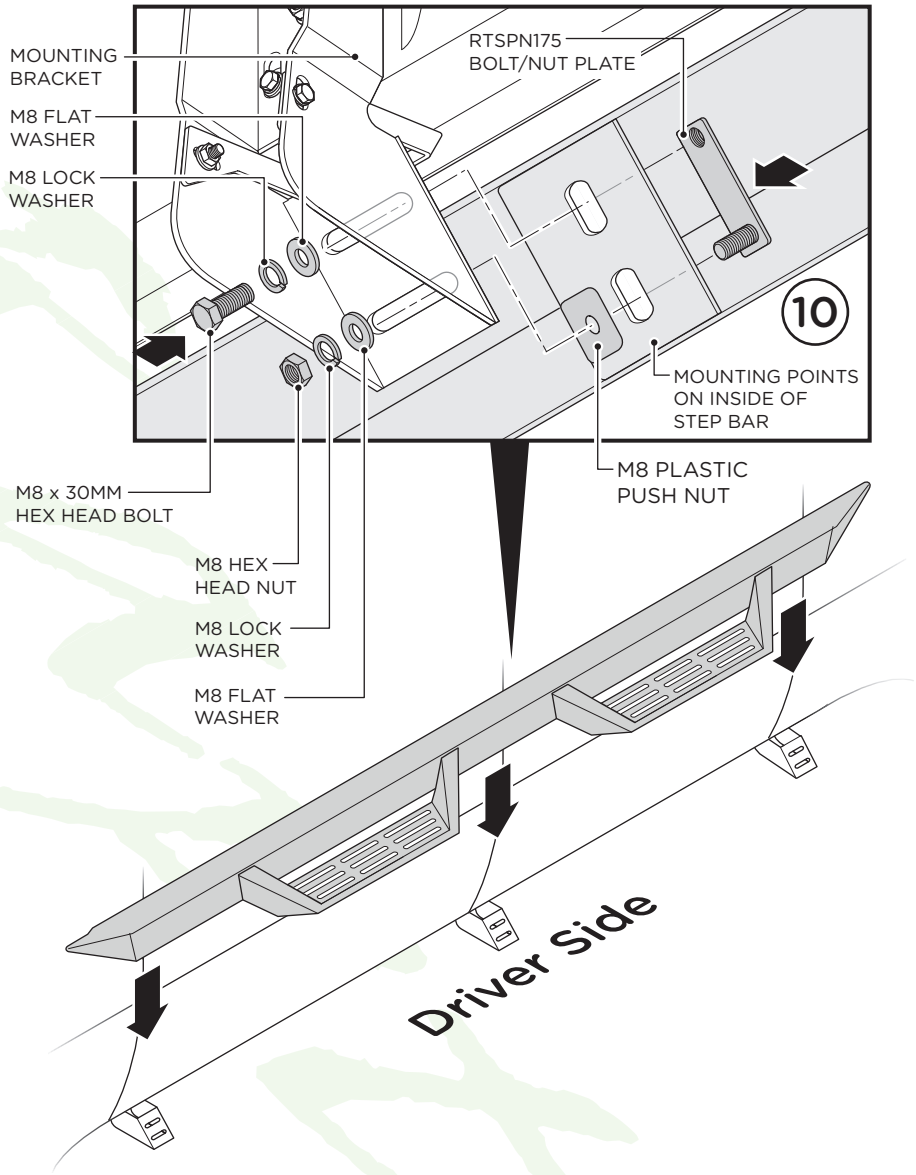

OPTIONAL:
If you wish to install the Front Armor Plates, begin by thoroughly cleaning the front side of the front step where the Front Armor Plate will attach.

1. Remove adhesive protection from the Front Armor Plate.

2. Carefully line up with the front side of the front step. Be careful not to let the side overhang as they could peel off over time.

Once lined up, firmly press the Front Armor Plate on the step to ensure complete adhesion.
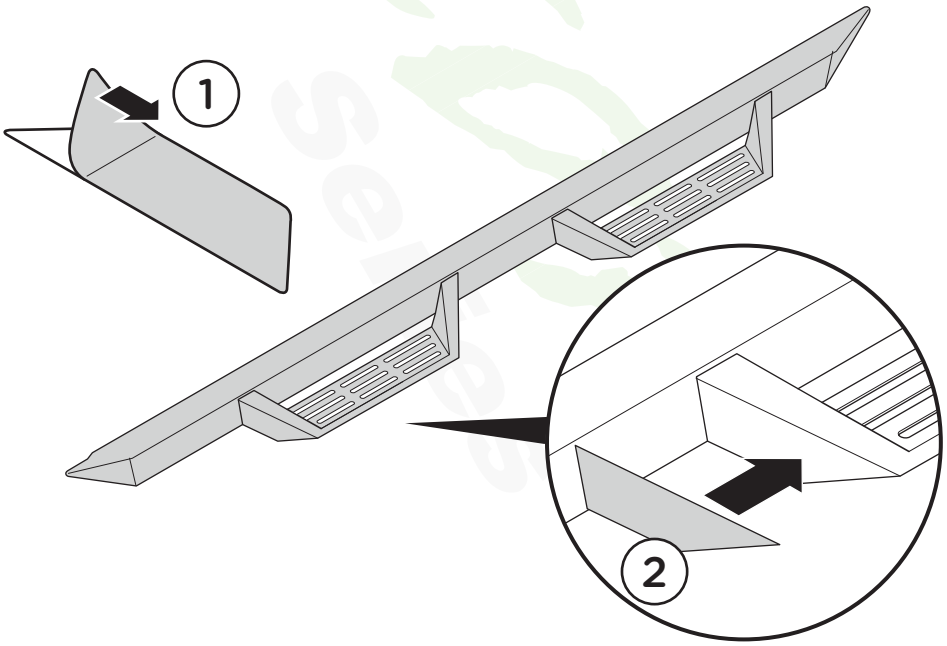
Repeat these steps for opposite side.