BX7420
Avail Tow Bar
Operator Manual & Installation Instructions

Serial Number

Avail Tow Bar
Class IV (10,000 lb) 2 Inch Receiver

Have an Adventure
blueox.com • 800-228-9289
facebook.com/blueoxproducts

General Information

1. Ensure that your product(s) are registered online at www.blueox.com. It is crucial to register your product(s) so that you may be alerted of product offerings, updates, upgrades, maintenance and safety bulletins, and/or recalls.

DO NOT INSTALL, OPERATE OR USE THIS EQUIPMENT UNTIL THE FOLLOWING OPERATING AND SAFETY INSTRUCTIONS HAVE BEEN READ AND UNDERSTOOD.

1. Blue Ox tow bars should only be used with vehicles that are towable or have been equipped to be towed.
2. Follow towing procedures in the vehicle owners manual.
3. Tow with the steering wheel of the towed vehicle in the unlocked position.
4. Be sure the front end of the towed vehicle is properly aligned. Misaligned vehicles may cause poor tracking or abnormal wear on the tires.
5. **The use of safety cables or chains are required by law in most states of the United States as well as Canadian territories and provinces. Follow state or territory recommendations. Blue Ox strongly recommends the use of safety cables (BX88196, Class III or BX88197, Class IV) and permanent safety cables (BX88207, Class III or BX88208, Class IV) with all applications of towing. Please refer to their specific installation instructions for more information.**
6. Check clearance between vehicles in all turning situations. Check the height difference in your towing set up and make appropriate adjustments by following the recommendations of the tow bar instruction manual.
7. Rear lighting is required on the towed car. Blue OX offers lighting kits to cover all of your lighting needs. Contact your Blue Ox representative for more information.
8. Prior to usage, inspect all towing equipment for cracked welds, missing or worn parts and loose bolts.
9. Disconnect the towed vehicle from the towing vehicle before backing up. **Do Not Back Up** while vehicles are connected! Damage to both vehicles and the towing system may occur. The towed vehicle may jackknife causing abnormal stress to the tow bar, car chassis, baseplate and/or pintle hitch of the towing vehicle. These abnormal stresses may cause damage that may go undetected.
10. Avoid sharp turns and rough terrain. Check towing set up after any emergency situation and/or periodically on a long trip.
11. **Do not use the towed vehicle for storing luggage, etc.; which may cause you to exceed the towing capacity of the tow bar, baseplate, and its accessories.**
12. **Ensure that your towing vehicle is of adequate size to properly control your towed vehicle. The weight and braking capacity should be large enough to handle both vehicles in an emergency situation. Check your towing vehicle manufacturers recommendations for towing, hitch load, and braking capacities. The hitch, ball, motor home chassis, and safety cables (each individual cable) need to be rated at a minimum for the weight of the vehicle being towed.**
13. Dealer or installer be certain the user receives these instruction sheets.

⚠ **CAUTION:** As with any mechanical product, care should be taken during installation and operation to prevent your fingers from being pinched.

Tow Bar Installation

1. Slide the hitch connector into the receiver tube of your towing vehicle hitch, ensuring that the tow bar is right side up with the locking handles on top. Install the receiver pin provided into one of the two holes of the hitch receiver. The inside hole of the receiver tube is most commonly used. Blue Ox offers receiver and tow bar lock sets (BX88101 & BX88177) that help prevent theft. Contact Blue Ox for more information.

   NOTE: The configuration of the rear of your towing vehicle will determine how far you can slide the hitch connector into the receiver tube. Later, when the tow bar is folded, you may need to change which set of holes are used in the hitch connector or order a longer hitch connector.

   ⚠ **CAUTION:** It is important that the attachment points at the center of the attachment tabs and the center of the coach's hitch receiver should be of equal distance. If a deviation must occur, then it is recommended that the hitch receiver be no more than 3” above or below the attachment tabs of the baseplate.

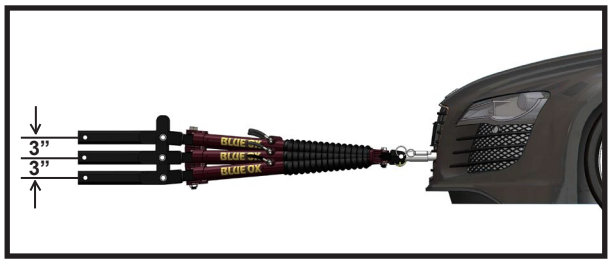

   Note: In some situations extra length may be required from the tow bar receiver to the towing vehicle’s receiver hitch to achieve sufficient clearances. However, Blue Ox only approves two or less connection points between the towing and towed vehicle, with a length no greater than 12” (hitch pin to hitch pin) on the extension/drop receiver.
   Example: Having a tow bar, drop receiver, and hitch extender is NOT recommended as it exceeds the maximum two points of connection.

   Using your Blue Ox tow bar system with extensions that include more than two connection points or a length greater than 12”(hitch pin to hitch pin), or in any other manner that is contrary to or otherwise not consistent with the recommendations, approvals or policies of Blue Ox, constitutes a dangerous misuse of the product and will void any and all warranties on the product both express and implied.

Hooking Up to Towed Vehicle

1. Position the towing vehicle on a level surface with a straight driveway ahead and engage the parking brake. Position the towed vehicle behind the towing vehicle in the approximate towing position.

2. Partially extend one leg. The legs are held in with an internal “soft” latch. Pulling out on the leg will disengage this latch. Place the triple lug between the attachment tabs on the baseplate, and secure with the 1/2” pin and quick pin. Be sure the 1/2” pin is installed ***correctly*** through the attachment tab with the nose towards middle of the baseplate. Repeat for both legs.

3. On the towed vehicle, disengage the parking brake and set up the transmission for towing and unlock the steering wheel. Pull forward with the towing vehicle until one or both of the locking handles are engaged and locked (When locked they will “pop” up). If only one locking handle is locked, turn the towed vehicle’s steering wheel towards the unlocked tow bar leg approximately 1/2 to 3/4 turn, before continuing forward. Drive the towing vehicle forward until the second leg locks into place.

IMPORTANT: Check to ensure both legs are latched properly and pins are secured properly before towing. When properly installed the quick pin ring will snap back onto itself, and the chamfered side will be facing outwards. The steering wheel on the towed vehicle must be unlocked at all times while being towed. Failure to do so will create hazardous driving conditions.

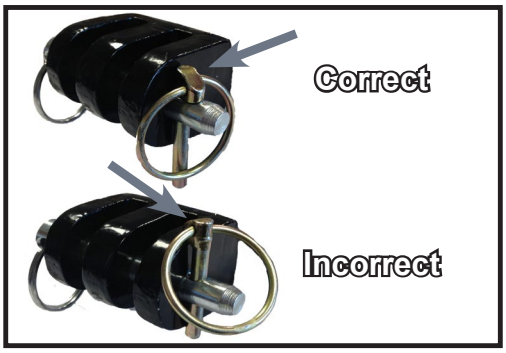

Safety Cable Installation

1. Utilizing the hooks, attach the cables to a solid part of the chassis on the towed vehicle or the convenience links of the baseplate in a crossing pattern. Verify the safety snap clicks back against the hook in order to prevent disconnection.
2. Adjust slack if needed allowing enough room for turns. Cables should not come in contact with the ground, pintle coupler or the locking handles; damage could occur! **DO NOT USE DAMAGED CABLES!** Route cables away from the locking handles. Safety cable contact with a locking handle could cause the leg to become unlatched and collapse, leading to major damage to one or both vehicles and towing equipment. **DO NOT WRAP SAFETY CABLES AROUND THE LEGS!**
3. Verify the load capacity of cables or chains used meets the needs of the towing set up.

Unhooking from Towed Vehicle

1. Park the towing vehicle with vehicle in tow, **in a straight line, on a level surface** to ensure minimum pressure is exerted on the tow bar legs. This will aid in the removal of the 1/2” pins. Engage the towing vehicle parking brake. Place the towed vehicle either in park for automatic transmissions or securely in first gear for manual transmissions and engage the parking brake. Unhook the lighting and safety cables.
2. Disengage the leg latches by pushing down on the locking handles. Remove the quick pins and 1/2” pins attaching the triple lugs to the attachment tabs. You may need to tap the 1/2” pins out if there is still pressure on them. Compress both legs completely until they lock in place. Place the 1/2” pins back into the triple lugs and secure with the quick pins to avoid losing either of them.

   NOTE: Each leg is equipped with a "soft" latch inside the end. Push in on each leg until they are held in detent by the soft latch.

Tow Bar Storage Position

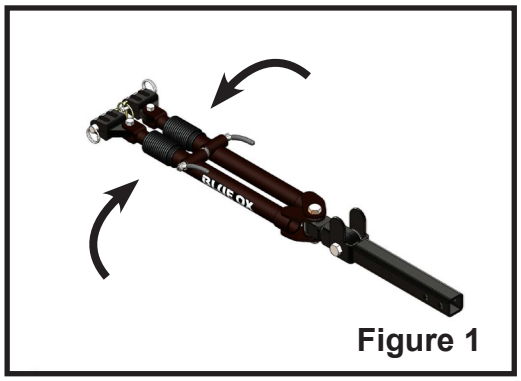

Figure 1

1. Swing the legs inwards towards each other (Figure 1).
2. With legs together, swing them up towards the towing vehicle. (Figure 2).
3. Rotate the legs down to either side until the ears of the leg capture the hold up tab of the hitch connector (Figure 3).

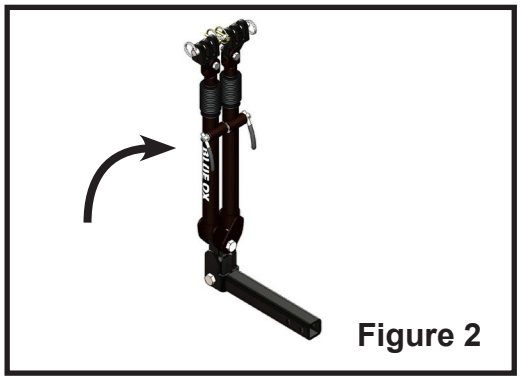

Figure 2

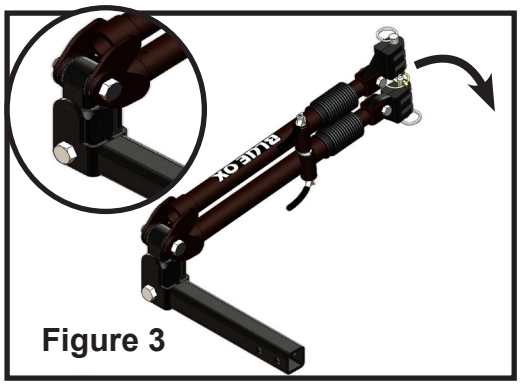

Figure 3

Tow Bar Maintenance

This tow bar requires periodic maintenance. It will be subjected to road dirt and weather during use. We recommend a full tow bar service every two (2) years or 10,000 miles. The following tips will help maintain the condition of your new tow bar.

1. Keep the tow bar covered when not in use, on or off of the towing vehicle. This will cut down on the dirt build up on the legs and joints of the tow bar. A BX88308 tow bar cover is recommended.
2. Periodically clean the entire surface of the tow bar with a mild soap and water solution. Wipe dry with a clean cloth.
3. Check for cracked welds and repair any loose, worn or damaged bolts, rubber boots or cap plugs.
4. Approximately once per year or if it is difficult to move the legs in and out, remove the small cable ties holding the rubber boots to the legs and slide the boots back. Clean off the inner legs with a silicone spray or brake cleaner. Apply a light coat of multipurpose grease to each leg to ensure a smooth operation. Secure each boot back in place with an 8” UV rated nylon cable tie.

   Note: Only the inner legs require grease for normal operation. All other tow bar joints rely on self lubricating washers, if these joints become to stiff clean as directed with soap and water.
5. Before each trip check for movement in the baseplate. Grab the baseplate tabs and move up and down, making sure the baseplate is still secure to the vehicle’s frame.

   Call the Customer Care Department at 402-385-3051 to learn how you can have your tow bar serviced for a fee by a Blue Ox Technician at rallies, by visiting our Pender facility, or by mailing your tow bar to the factory. They can also help find a Blue Ox Dealer to help service your tow bar.

If the tow bar’s legs do not operate smoothly or the joints become excessively loose, take your tow bar to an authorized Blue Ox Dealer or call Blue Ox Customer Care for repairs.

Replacement Parts

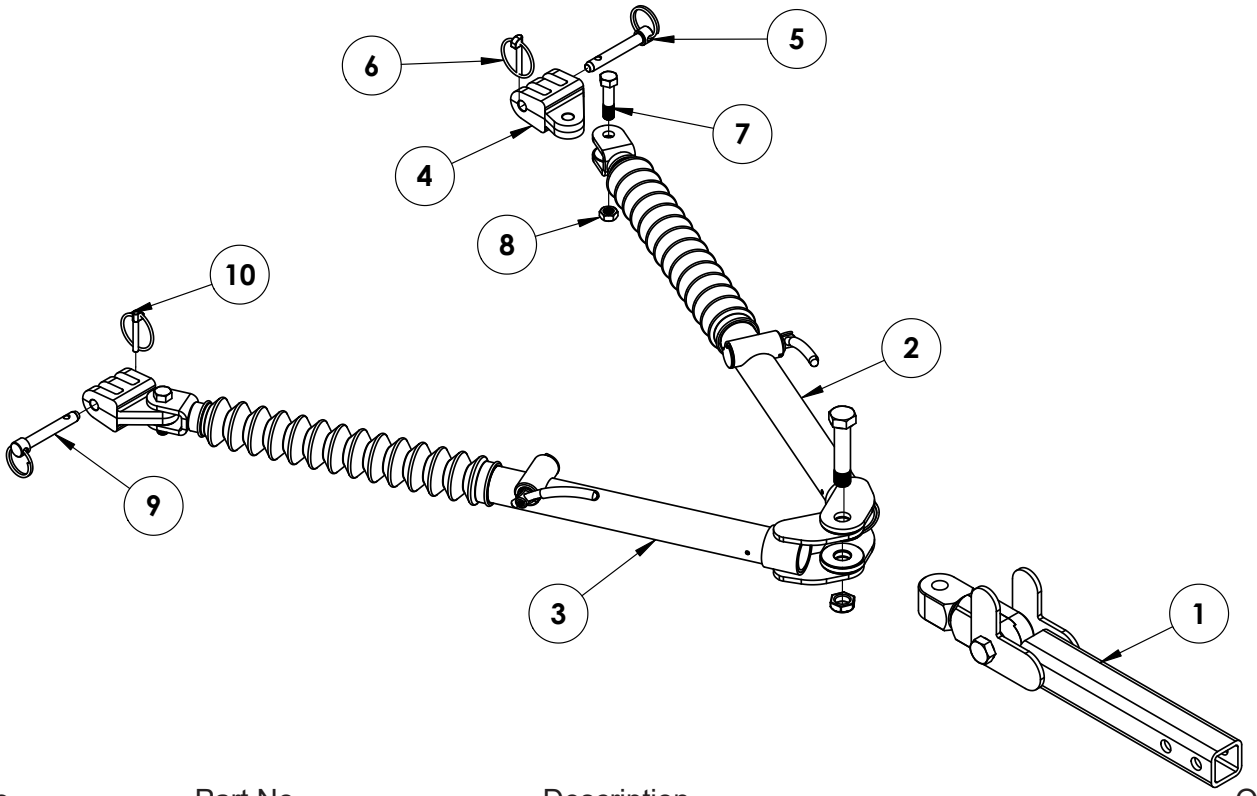

Item No.	Part No.	Description	Qty.
1	84-0186(shown)	Hitch Connector, Standard 2”	1
2	84-0192	Leg Assembly, Driver Side	1
3	84-0193	Leg Assembly, Passenger Side	1
BX88154 (Triple Lug Kit)			
4	299-0736	Offset Triple Lug	2
5	229-0520	1/2” Pin	2
6	62-3213	Quick Pin	2
7	201-0645	1/2”-13 x 2” Hex Head Bolt	2
8	202-0143	1/2”-13 Essna Jam Nut, ZP	2
84-0140 (Pins w/Clips Kit)			
9	229-0520	1/2” Pin	2
10	62-3213	Quick Pin	2
Additional Kits Available:			
11	84-0102	Tow Bar Rubber Boot Kit	1
12	84-0191	Tow Bar DS Latch Assembly Kit	1
13	84-0195	Tow Bar PS Latch Assembly Kit	1
14	84-0194	Tow Bar Handle Grip Kit	2
15	84-0196	Tow Bar Washer Replacement Kit	1
16	84-0204	Pivot Shaft Bushing Kit	1

Important:

Use only genuine factory replacement parts on your tow bar. Do **NOT** substitute homemade or non-typical parts. If a bolt is lost or in need of replacement, for your safety and the preservation of your tow bar, be sure to use a replacement bolt of the same grade (In most cases it will be Grade 5, please reference the parts list above). Replacement parts may be ordered through your nearest Blue Ox® Dealer or Distributor. Failing to follow and/or altering these installation instructions in either installation or required equipment will void the manufacturer’s warranty.

Optional Hitch Connectors

2” Receivers

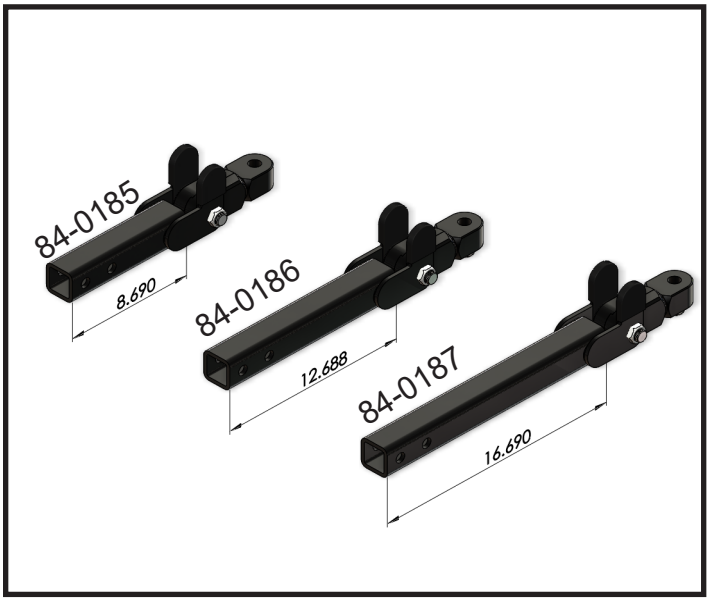

2-1/2” Receivers

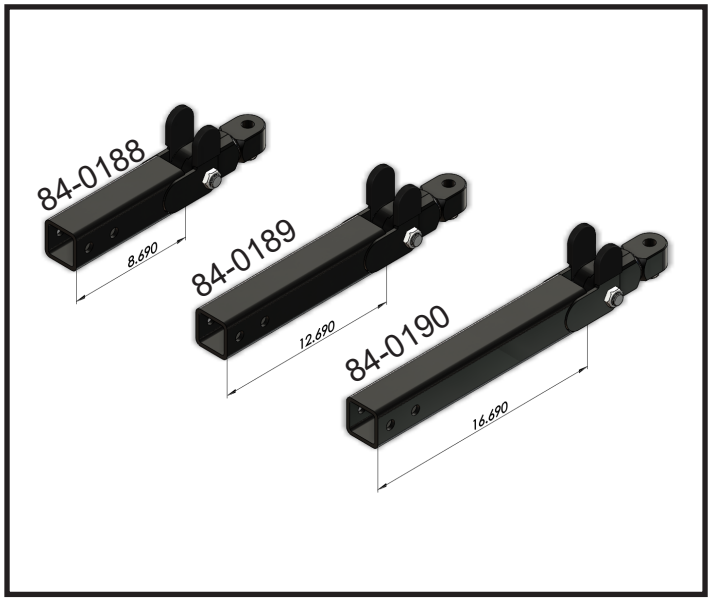

CUSTOMER SERVICE COMMITMENT

Blue Ox® is committed to providing you with exceptional customer care throughout your lifetime with our products. Our team is here to assist you with any questions you may have regarding the performance of your product. Simply call (402) 385-3051 and you can speak with our technical service team.

Additionally, please visit our website to see which rallies our Destination America team will be attending. For a nominal fee, our service technician will service your towing system to ensure it’s in proper working condition. Also, as a commitment to our customers, should you visit our factory, you can stay at our full service Blue Ox® campground at no charge along with enjoying a factory tour.

Again, thank you for being our customer and for the confidence you have shown in the performance of our products. It is because of customers like you we enjoy the success we have today.

© 2016 Blue Ox
One Mill Road, Industrial Park
Pender, Nebraska 68047
Phone: (402) 385-3051
Fax: (402) 385-3360
www.blueox.com

BLUE OX ORIGINAL PURCHASERS THREE YEAR LIMITED WARRANTY

Automatic Equipment Manufacturing Company ("Automatic") warrants to the original (first) retail purchaser that this product, manufactured by Automatic, shall be free from defect in material and workmanship under normal use and service for a period of three years from the date of delivery.

During said three-year period, Automatic will repair or replace any parts that have been returned by the original purchaser, to the factory, transportation prepaid, and in Automatic's sole and absolute opinion found to be defective.

Limitations on Warranty Coverage:

Coverage under this warranty will be valid only if the customer warranty card is returned by the original purchaser within 30 days of purchase.

Coverage under this warranty will be effective only when a copy of the original invoice, showing date and place of purchase, accompanies any claim for warranty. This warranty is NON TRANSFERABLE.

This limited warranty will not cover, in any way or form, any alleged damages caused by incorrect or improper installation, improper use, modification or neglect of product, failure to properly service and maintain, misuse, act of God, accident or failure of the user to follow guidelines contained in the instructional material provided by Automatic.

This warranty does not cover normal wear and tear, paint or rust.

Warrantor assumes no responsibility to the owner for loss of use of product, loss of time, inconvenience or any other damage consequential or otherwise. Including, but not limited to mileage, expense of transporting of product, return shipping expense, mechanics travel time, telephone, road service, towing, and rental during repairs, travel, lodging, loss or damage to personal property or loss of earnings.

REPAIR OR REPLACEMENT AS SET FORTH IN THIS LIMITED WARRANTY IS THE SOLE EXCLUSIVE REMEDY OF THE PURCHASER. AUTOMATIC SHALL NOT BE LIABLE FOR ANY INCIDENTAL OR CONSEQUENTIAL DAMAGES FOR BREACH OF ANY EXPRESS OR IMPLIED WARRANTY ON THIS PRODUCT. EXCEPT TO THE EXTENT PROHIBITED BY APPLICABLE LAW, ANY IMPLIED WARRANTY OF MERCHANTABILITY OR FITNESS FOR A PARTICULAR PURPOSE ON THIS PRODUCT IS LIMITED IN LENGTH TO THE DURATION OF THIS WARRANTY.

Please visit http://blueox.com/warranty/ to register your warranty

BLUE OX