CR-Z Chase Rack

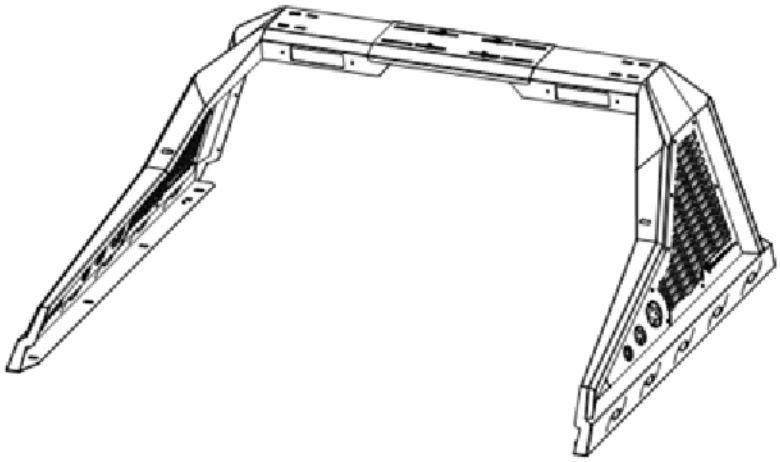

IMAGE IS FOR REFERENCE,
SHOWN WITH ADDITIONAL ACCESSORIES

STOP
Verify part and application is correct before proceeding.
If missing part or damage item please customer service directly.
Monday - Friday 9am-6pm PST (909)895-4522
Email - SUPPORT@ARMORDILLOUSA.COM
We strongly recommend reading through the installation guide before installation.

ARMORDILLO RECOMMENDS PROFESSIONAL INSTALLATION ON ALL THEIR PRODUCTS

WARNING: When working on ,under or around vehicle exercise caution. If working without a lift check vehicle owners manual for correct jacking points. Always wear safety glasses and ensure a safe working area. Serious injury or death could occur if safety measures are not followed.

PERIODICALLY CHECK TO ENSURE ALL FASTENERS ARE TIGHT AND ALL STRUCTURAL COMPONENTS ARE SOUND

CARE
To protect your investment, wax this product after installing. Regular waxing is recommended to add a protective layer over the finish. Do not use any type of polish or wax that may contain abrasives, that could damage the finish.

For stainless steel: Aluminum polish may be used to polish small scratches and scuffs on the finish.
Mild soap may be used to clean bull guard.

For color finishes: Regular waxing is recommended to add a protective layer over the finish.
Mild soap may be used to clean the bull guard.

ARMORDILLO products are designed as decorative accessories and should not be relied upon as protection for the vehicle or passengers. Buyers assume all risk and liability whatsoever resulting from installation and use of ARMORDILLO products. ARMORDILLO assumes no liability for injury, loss, incidental or consequential damages in the event of an accident.

ARMORDILLO guarantees the original purchaser a LIMITED 5 YEAR WARRANTY from data of purchase against manufactured defects in materials, workmanship and finish under normal use. This excludes damage resulting from road hazards, debris, product misuse, improper installation, impairments from accidents, neglect, shipping or product modification. This warranty applies only to new products and is limited to the repair or replacement of ARMORDILLO products. Warranty does not included cost of removal, installation, labor, freight, inconvenience, or consequential damage. Original purchaser must return defective merchandise to the original place of purchase and must provide the proof of purchase.

21912 Garcia Ln, Walnut, CA 91789
(909) 895-4522
WWW.ARMORDILLOUSA.COM
SUPPORT@ARMORDILLOUSA.COM
1/2021 5000 REV1

Parts

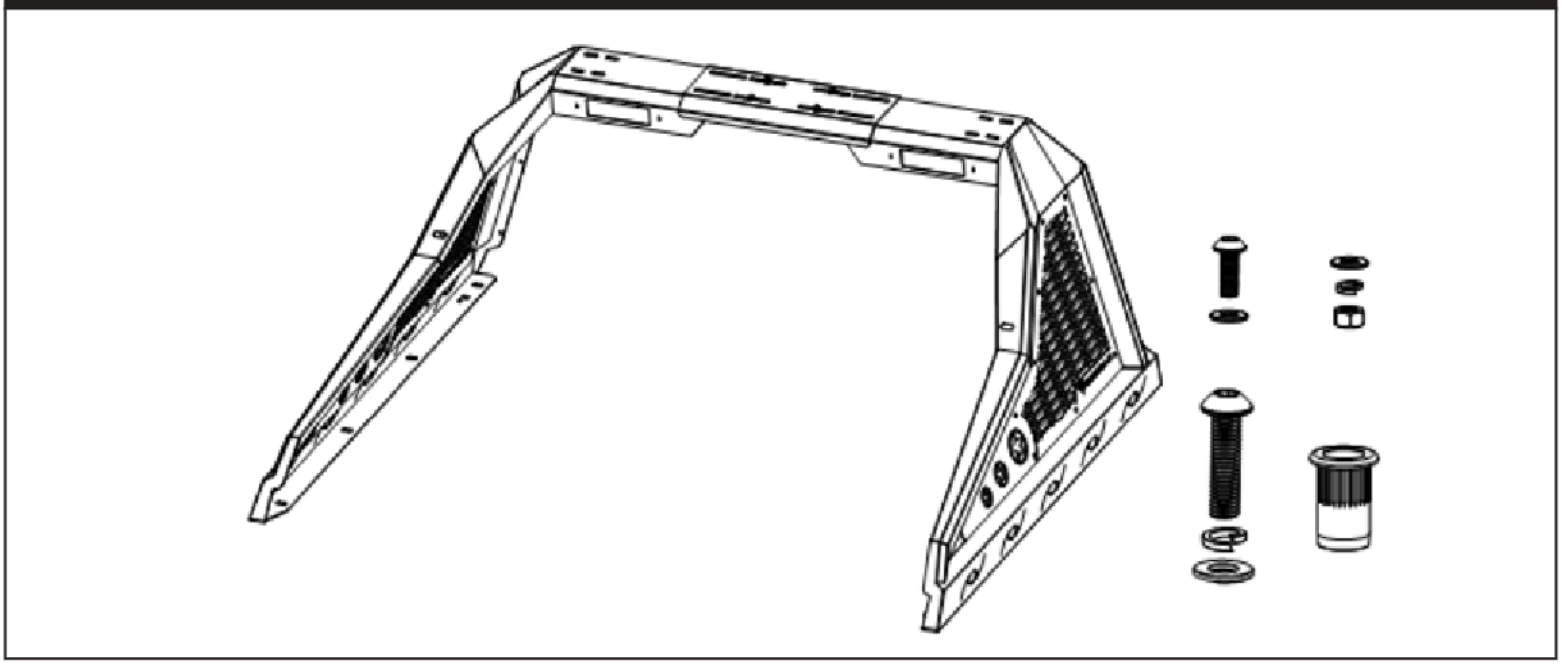

LEVEL OF DIFFICULTY: EASY

INSTALL TIME: 60-90 MIN.

IF YOU ARE HESITANT TO UNDERTAKE THIS TASK ON YOUR OWN, CONTACT AN AUTHORIZED INSTALLER FOR ADDITIONAL ASSISTANCE

SAFETY GLASSES AND GLOVES SHOULD BE WORN AT ALL TIME WHILE INSTALLING THIS PRODUCT.

TOOL REQUIRED

SIZE	DESCRIPTION
3/16" - 7/16"	Drill Bit/Step
	Drill
17mm	Socket/Wrench
5/16"	Allen Wrench/Socket
M10	Nutsert/Rivet nut Tool
	Utility Knife

INSTALLATION TIPS:

1) REMOVE CONTENTS FROM BOX, VERIFY ALL PARTS LISTED ARE PRESENT AND FREE OF DAMAGE. READ AND UNDERSTAND ALL INSTRUCTIONS BEFORE ATTEMPTING INSTALLATION.

2) TWO PERSON WILL BE REQUIRED WHEN MOUNTING AND ALIGNING CHASE RACK.

3) USING PROPER TOOLS WILL IMPROVE THE QUALITY OF THE INSTALL AND REDUCE INSTALLATION TIME.

4) ANTI-SEIZE LUBRICANT IS HIGHLY RECOMMEND TO USED ON ALL STAINLESS STEEL FASTENERS TO PREVENT DAMAGE TO THE THREAD AND GALLING.

PARTS LIST:

Driver Side Panel	1	Passenger Side Panel	1
Adjustable Mid Plate Section	1	Driver Side Mid Section	1
LED 3rd Brake light	1	Pass. Side Mid Section	1
6" LED POD	2	M8 x 25mm Button Head bolt	10
M10 x 35mm Button Head bolt	8	M8 Washer	20
M10 Lock Washer	8	M8 Hex Nut	10
M10 Washer	8	M8 Lock Washer	10
M10 Nutset/Rivet nut	8		

Hardware Reference Chart

	M6	M8	M10	M12	M14	M16
Socket size	10mm	13mm	17mm	19mm	22mm	24mm
Grade 8.8/8.9	102ft.lbs.	20ft.lbs.	50ft.lbs.	70ft.lbs.	110ft.lbs.	175ft.lbs.
Grade 10.9	144ft.lbs.	30ft.lbs.	72ft.lbs.	1t40ft.lbs	165ft.lbs.	225ft.lbs.

PERIODICALLY CHECK TO ENSURE ALL FASTENERS ARE TIGHT A ND ALL STRUCTURAL COMPONENTS ARE SOUND

Armordillo USA warrants this product to be free of defects in material and/or workmanship at the time of retail purchase by the original purchaser. If the product is found to be defective, We may repair or replace the product at their option, when the product is returned, prepaid, with proof of purchase. Alteration to, misuse of, or improper installation of this product voids the warranty. We liability is limited to repair or replacement of products found to be defective, and specifically excludes liability for incidental

21912 Garcia Ln, Walnut, CA 91789 (909) 895-4522

WWW.ARMORDILLOUSA.COM SUPPORT@ARMORDILLOUSA.COM

1/2021 5000 REV1

INSTALLATION WALKTHROUGH:

READING INSTRUCTIONS THOROUGHLY AND COMPLETELY BEFORE BEGINNING INSTALLATION.
WE ARE NOT RESPONSIBLE FOR ANY DAMAGE OR FAILURE RESULTING FROM IMPROPER INSTALLATION.

1) Lay out the parts on protected surface to prevent damage to the chase rack finish. Locate the mount point on the Driver side panel and middle section, Connect the driver side panel and middle section as shown with provided hardware by placing (3) M10X25mm button head bolt and (3) M10 Washer thru the hole on the driver side panel attaching it to the middle section panel with (3) M10 washer, (3) M10 lock washer and (3\) M10 Hex nut and repeat for Passenger side panel. After the panels are attached you will tighten hardware to 50 ft. lbs.

2) Attach the driver side to the adjustable mid section using on (2)M10 x 20mm button head bolt and (2) M10 washer on the top and use ,(2) M10 washer, (2)M10 lock washer, (2) M10 Hex nut on the bottom to attached the panel to driver/passenger side.

3) Carefully place the assemble chase rack on to the bed of the truck and adjust it to desire position. Once the chase rack is placed in desire position mare sure the mount points on each side of the bed cap is interfering with anything underneath the bed cap, may need to remove bed cap to confirm. After confirming there is nothing behind the mount point, mark the holes, remove the chase rack from the truck and use a 3/16" drill bit to start a pilot hole and working your way up to 7/16" drill bit. NOTE: Allow the nutsert/rivet nut to be snug with drilled hole.

4) Once the holes are drilled out, check to make sure the nutsert/Rivet Nut fit sung into the hole. Use a nutsert/Rivet Nut tool to expand the nut in drilled hole, failure to fully expand the nutsert/rivet nut will not hold the bolts in place.
NOTE: It is recommend to trim the hole to allow the nutsert/rivet nut to sit flush with the bed before expanding the nutsert/rivet nut into place. If you do not have the tool you may still be able to attach the nutsert/Rivet to the vehicle, but it is strongly recommend to use the Nutsert/Rivet nut tool.

To Install nutsert/rivet nuts without a tool you will need the following.
1) M10 Bolt that is about 1.5" in length. (Not Included)
2) Oversize nut, bigger than the bolt thread
3) Washer
4) 2 open wrench, one for the oversize nut and the other for the bolt.

After placing the nutsert/rivet nut in the hole, you will thread on the bolt with the oversize nut and washer. Using the wrench for the oversize nut to hold it in place as you tighten the bolt it will expand the nutsert/rivet nut tighten it in place. HIGHLY RECOMMEND

SEARCHING VIDEO ON METHOD BEFORE ATTEMPTING TO INSTALL NUTSERT/RIVET NUT WITHOUT TOOL, THIS IS A GENERALGUIDE.

5) After nutsert/rivet nut is installed on the bed cap place the chase rack on the bed and adjusted into desire location to attached chase rack. Attached the chase rack with the supplied hardware (6) M10x35mm hex button bolt, (6) M10 Lock washer, (6) M10 washer, tighten hardware to 50 ft. lbs.

INSTALLATION WALKTHROUGH:

6) Do periodic inspections to the installation to ensure all hardware is secure and tight.

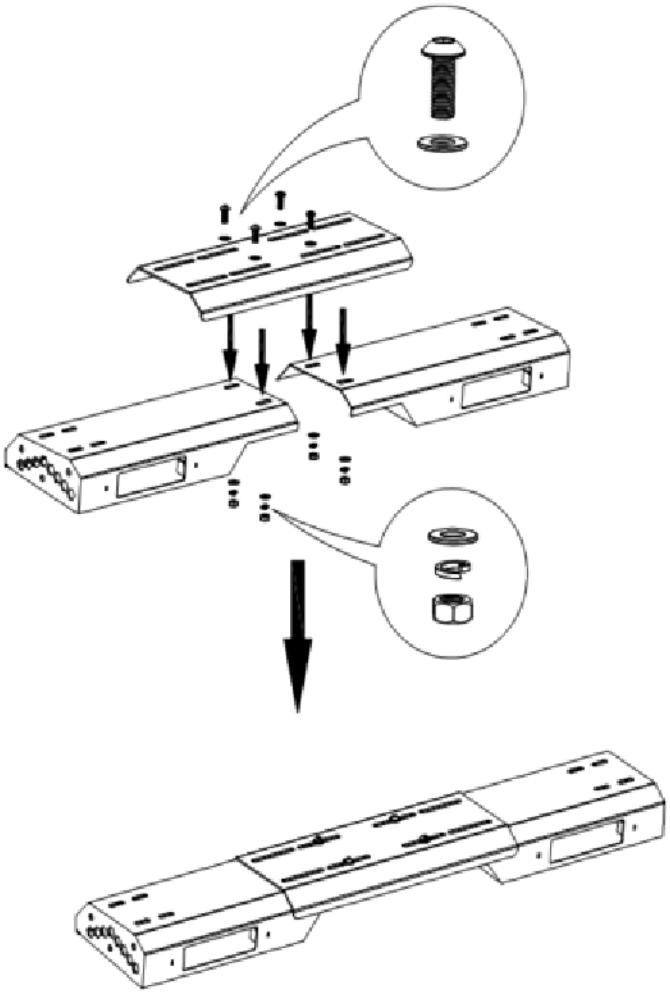

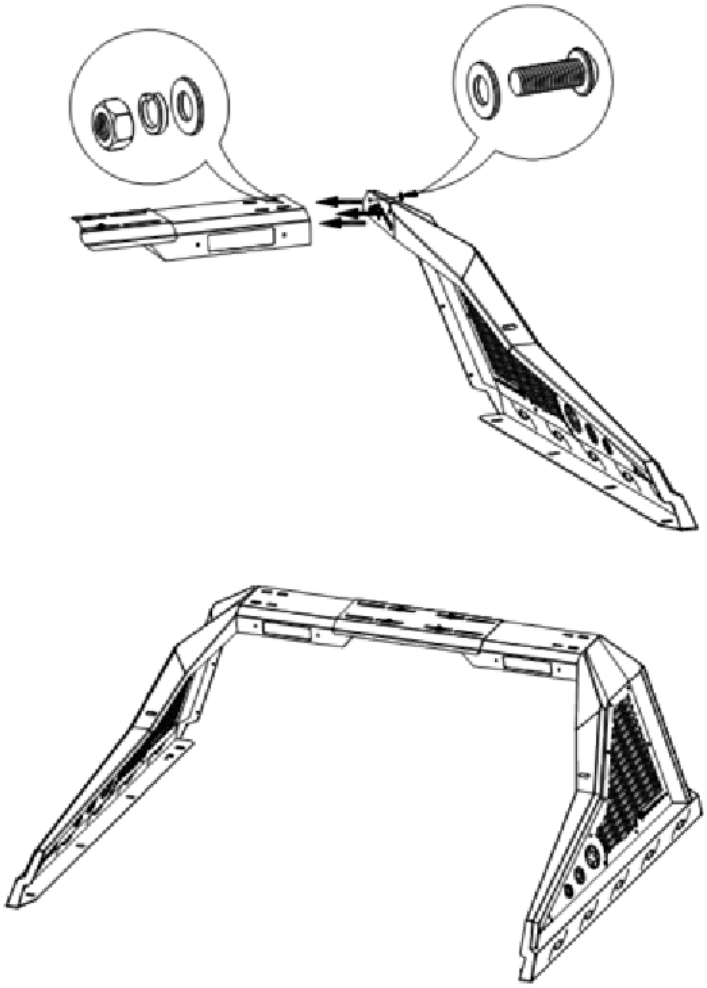

INSTALLATION WALKTHROUGH:

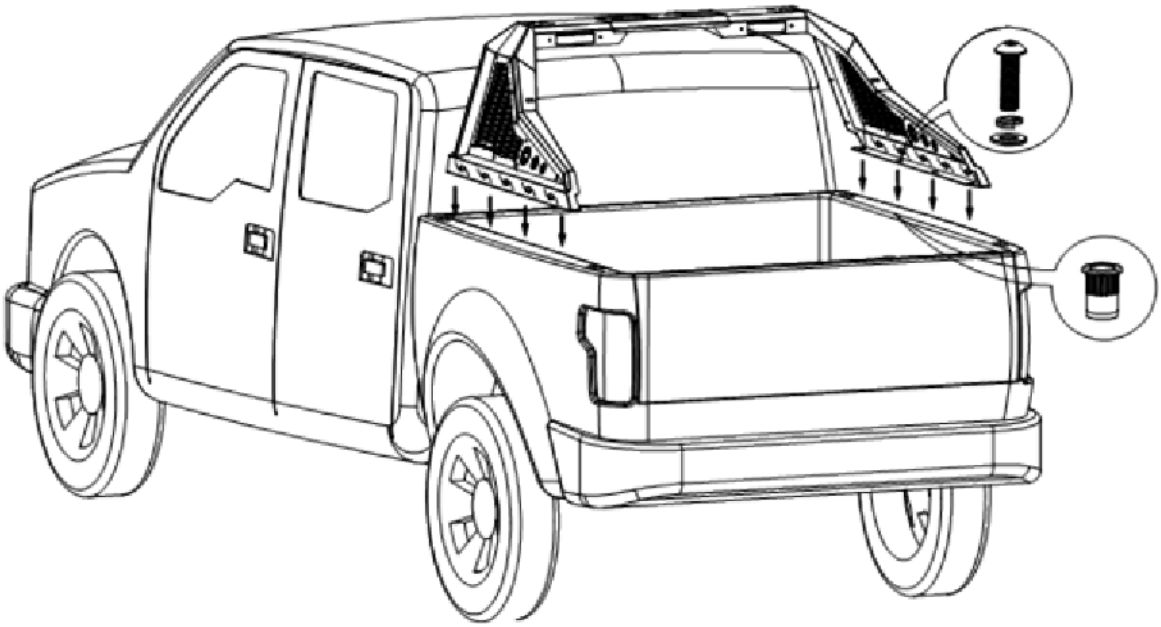

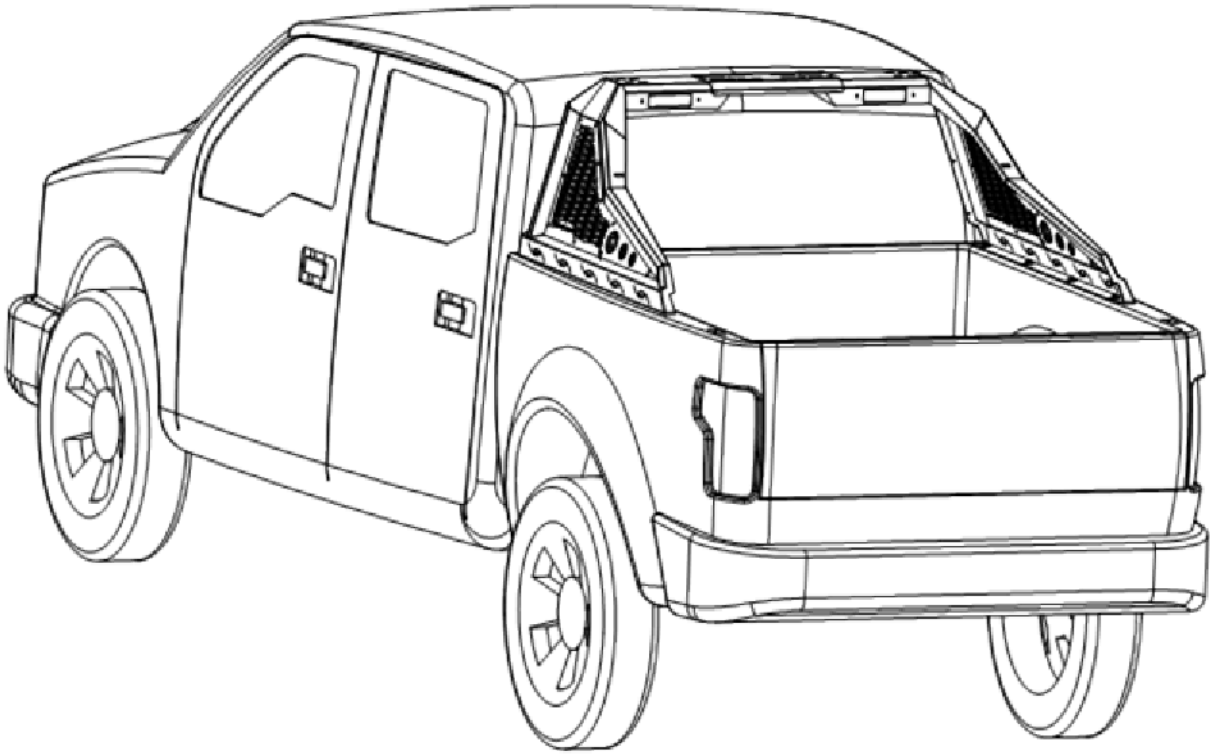

Wiring Information

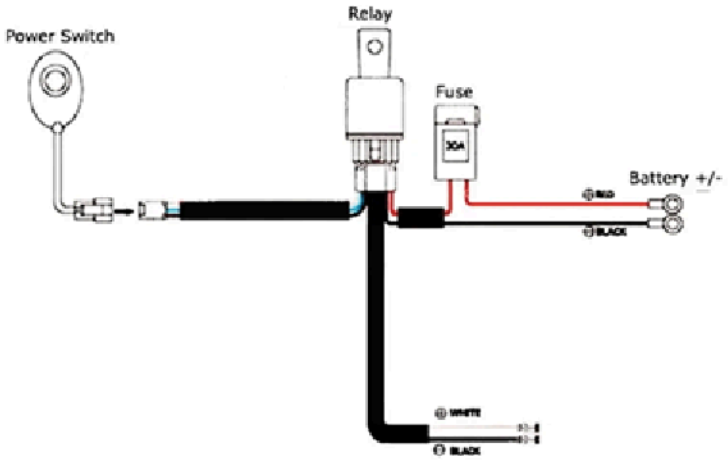

WARNING

This is meant for informational purposes only! DO NOT ATTEMPT ANY WIRING OF ANY KIND if you lack the knowledge and understanding required. Otherwise personal injury and/or death as well as property damage or loss could occur.

Electricity is dangerous and can cause personal injury or DEATH as well as other property loss or damage if not used properly. If you have any doubts what so ever about performing do-it-yourself electrical work, PLEASE do the seek QUALIFIED SPECIALIST to perform the work for you. NEVER WORK WITH LIVE VOLTAGE. Always disconnect the power source before working with electrical circuits. When performing electrical work, ALWAYS READ AND FOLLOW THE MANUFACTURERS INSTRUCTIONS AND SAFETY GUIDELINES.

By utilizing the information given, YOU are expressly holding us HARMLESS FOR ANY PROPERTY DAMAGE, PERSONAL INJURY AND/OR DEATH, OR ANY OTHER LOSS OR DAMAGE THAT MAY RESULT FROM YOUR ACTIONS.