REALTRUCK AMP RESEARCH Power Step XL™

APPLICATION	MODEL YEAR	AMP Part #
Jeep Wrangler JL 4Dr *(For Gas, Diesel AND 4XE models)* *(Also includes Rubicon 392)*	2018 - 2027	77132-01A

INSTALLATION GUIDE

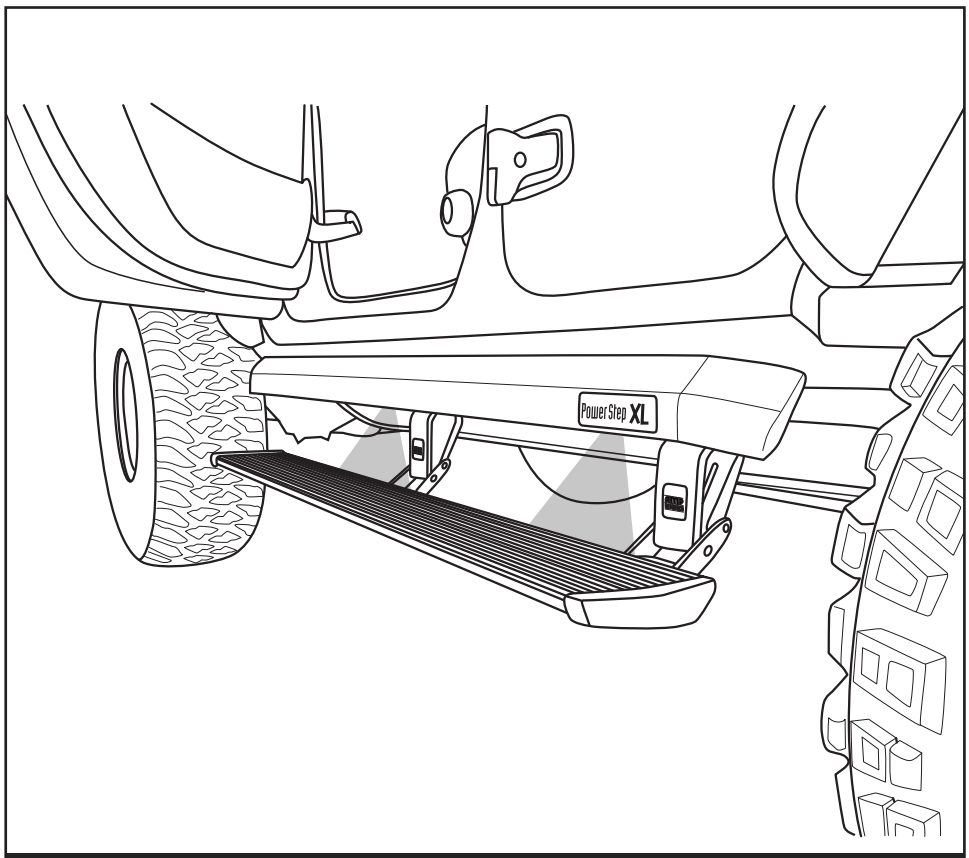

NEW Brose 2 Motor Design

INSTALLATION TIME
3-5 Hours
Professional installation recommended

SKILL LEVEL
1 2 3 4
4= Experienced

TOOLS REQUIRED
- ❑ Safety goggles
- ❑ Measuring tape
- ❑ 10 mm socket
- ❑ 13 mm socket
- ❑ 1/2” socket
- ❑ Ratchet wrench and extension
- ❑ Wire crimpers
- ❑ Wire stripper / cutter
- ❑ 3/16” hex key wrench (allen wrench)
- ❑ 4mm hex key wrench (allen wrench)
- ❑ Electrical tape
- ❑ Weather proof caulking (silicone sealer)
- ❑ Silicone spray
- ❑ 5/32” Allen Key
- ❑ T25 Torx Driver
- ❑ 1/4” Drill Bit

WARRANTY
5-Year Limited Warranty

REALTRUCK TECH SUPPORT 1-888-983-2204 (Press 2) Monday - Friday, 8:00 AM - 5:00 PM EST

Designed and manufactured by RealTruck AMP Research® • Made in Mexico
Patent Protected. Please see our product site for applicable patents. www.realtruck.com/b/amp-research/
© RealTruck Group, Inc., 2026 • Five-year limited warranty. • Professional installation is recommended.

The motors must be attached to the linkage before mounting to vehicle.

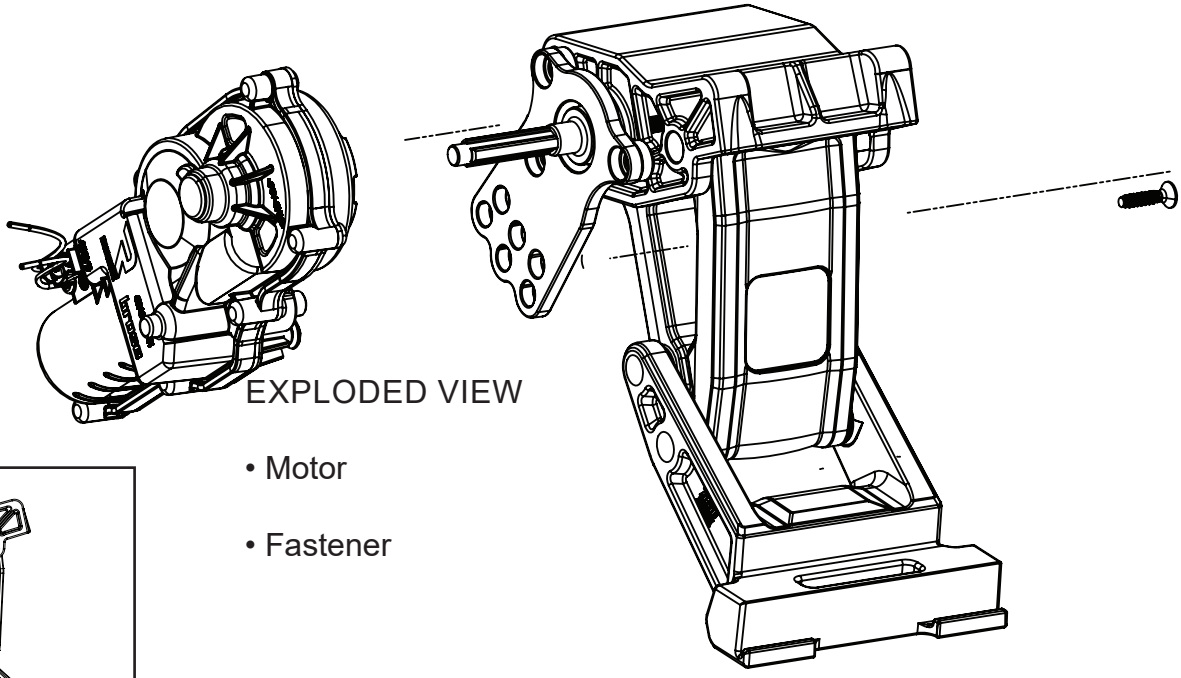

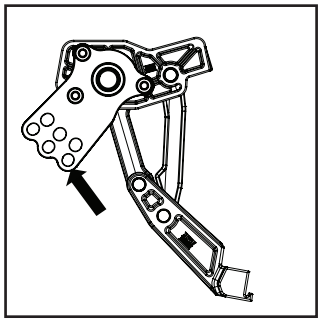

CAUTION: HANDLE WITH CARE.

To ensure our customers receive all components with full integrity, we pack the motors separate from their Linkage assemblies. This requires that the installer position and fasten the motor before continuing with the install. Please follow the instructions below and handle the assembly carefully.

CAUTION: Dropping the assembly or any excessive impact MAY cause damage to the motor.

Instructions:
1. Slide motor on to drive shaft.
2. Rotate motor by hand while on the shaft to postion it to the mounting plate (orientation as shown above).
3. Fasten motor to the motor mounting plate using supplied PT Screw with T-25 Torx driver. Tighten screw to 60 in-lbs (6.8 N·m). **Do not over torque.**

Note:
The motor and shaft have only three possible positions. Depending on the current position of the motor, motor/shaft and the orientation of the motor plate, it may be necessary to power it in order to align it correctly with the linkage and shaft during assembly so that the motor can be mounted to the mounting plate.
To do this:
1. Power up the motor.
2. Open the door to allow the motor to spin and reposition.
3. Once the motor times out, remove the fuse.
4. Assemble the motor onto the shaft.
5. Fasten motor to mounting plate.

This process may need to be repeated to achieve the correct alignment.

PARTS LIST AND HARDWARE IDENTIFICATION

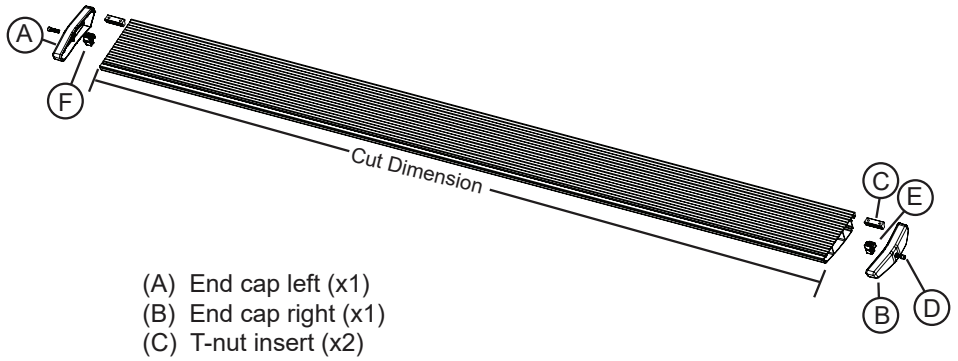

(A) End cap left (x1)
(B) End cap right (x1)
(C) T-nut insert (x2)
(D) Socket cap screw (x2)
(E) End cap wedge right (x1)
(F) End cap wedge left (x1)

1 x2
Step assembly

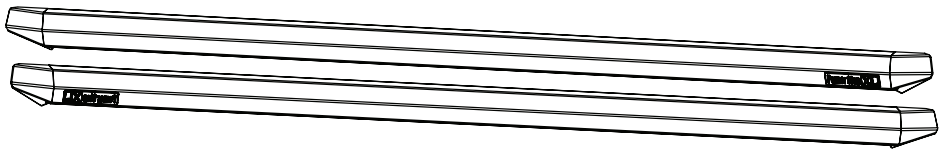

2 x2
Rail Assembly

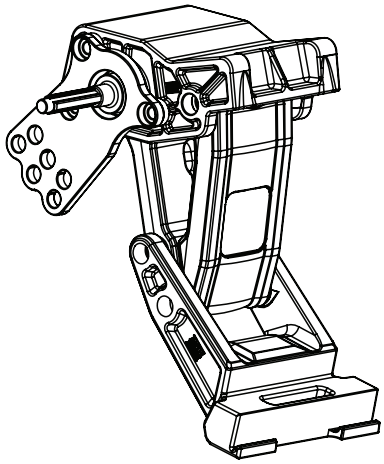

3 x2
Motor Linkage assembly
Driver

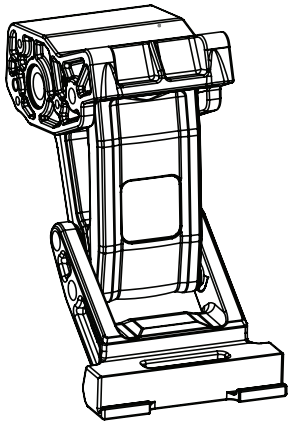

4 x2
Idler Linkage assembly

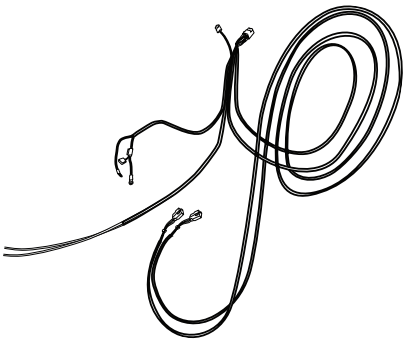

5
Wire harness

PARTS LIST AND HARDWARE IDENTIFICATION

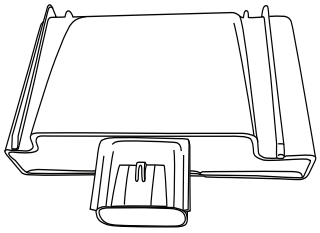

6
Controller SSA

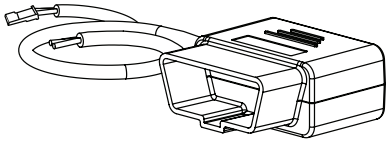

7
OBD Module

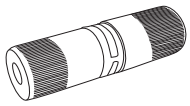

8 x4
Posi-Tite®

9
Posi-Lock®

10
OBD Module extension

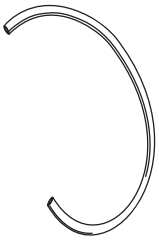

11
Tube (Installation Tool)

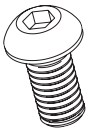

12 x10
M8 Button Head Bolt

13 x4
M6 Flange Bolt

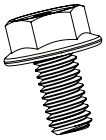

14 x4
5/16 Flange Bolt

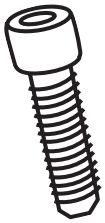

15 x8
Socket Cap Screw

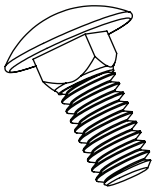

16 x14
5/16-18 Carriage Bolt

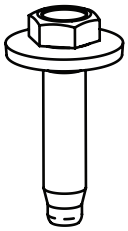

17 x12
M8 Hex Bolt w Conical washer

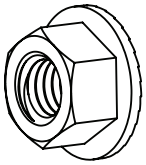

18 x18
5/16-18 Flange Nut

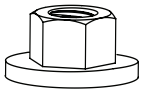

19 x10
Nut with Conical Washer

20 x14
Washer

PARTS LIST AND HARDWARE IDENTIFICATION

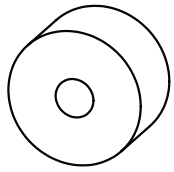

21 x4
Upper Mount Spacer

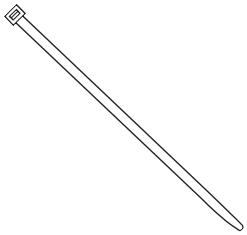

22 x20
Cable tie (7”)

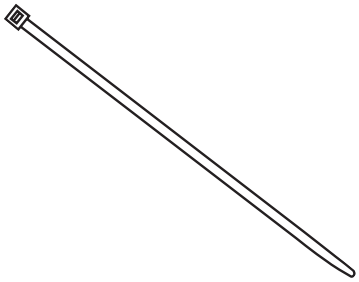

23 x2
Cable tie (11”)

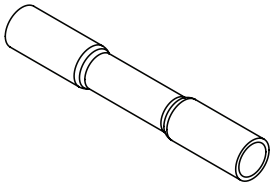

24 x8
Butt Connector

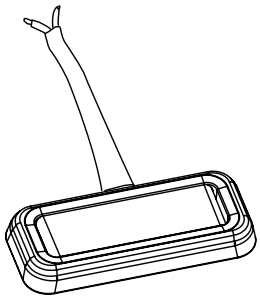

25 x4
LED Lamp

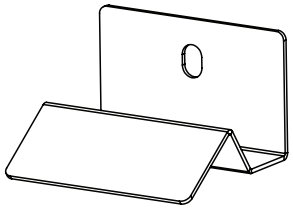

26 x4
LED Light Bracket

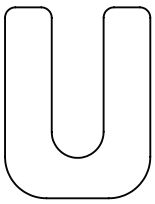

27 x2
Shim Spacer

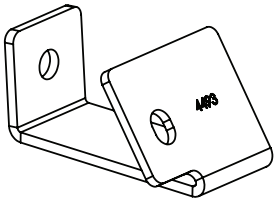

28 x2
Rail Support Bracket

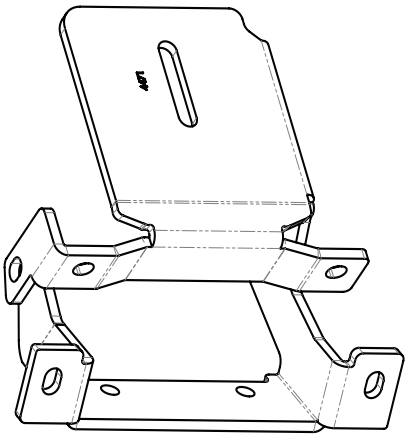

29 x4
Linkage mounting Bracket

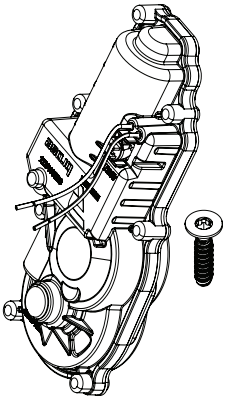

30 x2
Motor Assembly kit

Mounting positions circled for front and rear linkage mounting points. Passenger side shown.

Note: Motors face forward on each side.

Passenger Side shown.

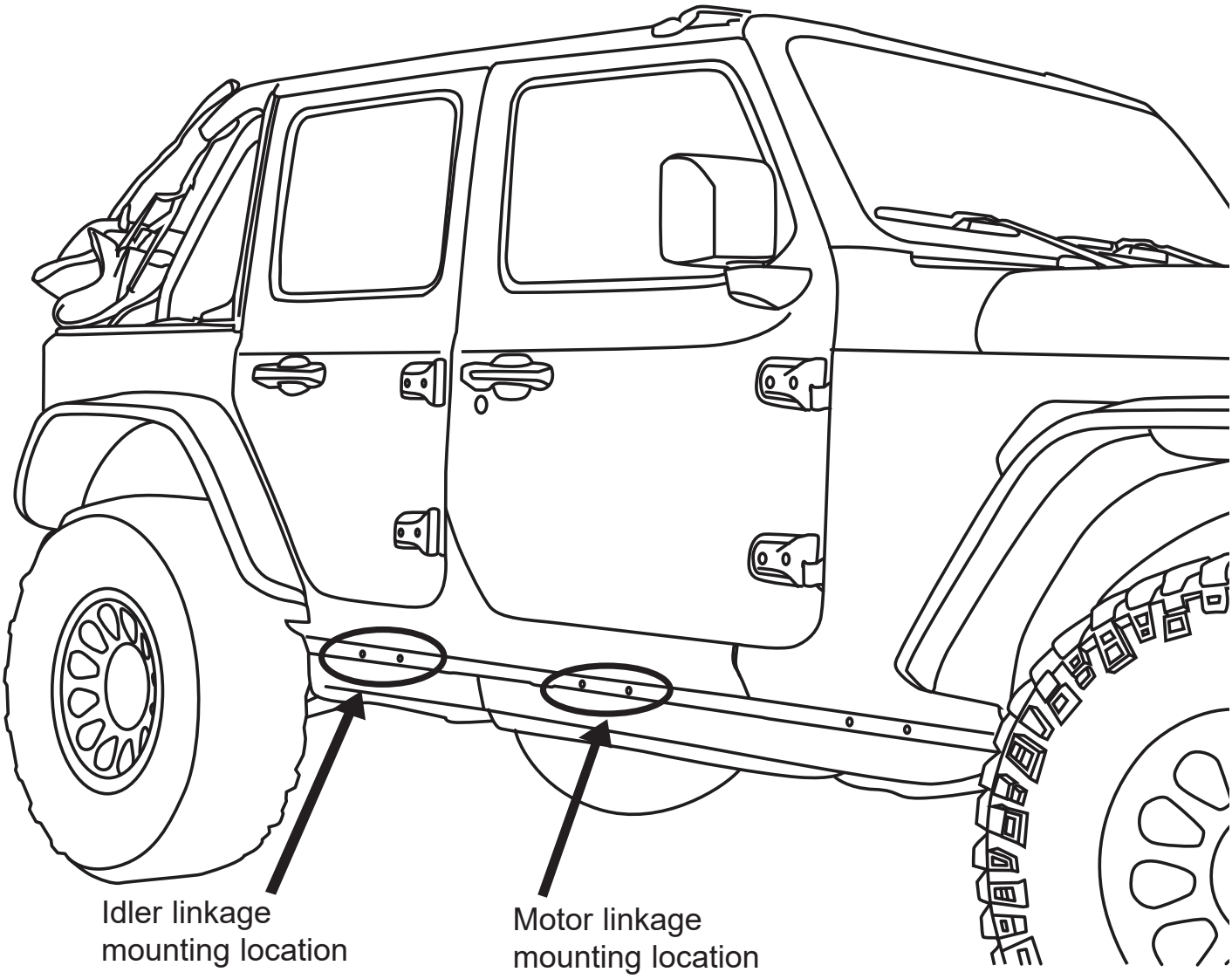

Assemble brackets onto vehicle. Use provided button head bolts (12) and washers (20) at pinch weld with conical washer nuts (19) at pinch weld. Assemble hardware loosely. Next use provided M8 Hex bolts (17) to attach bracket to underside of body. On front mount assemble shim (27) between floor mount and bracket as shown. Use brackets (29) on driver side. Mirror for passenger side.

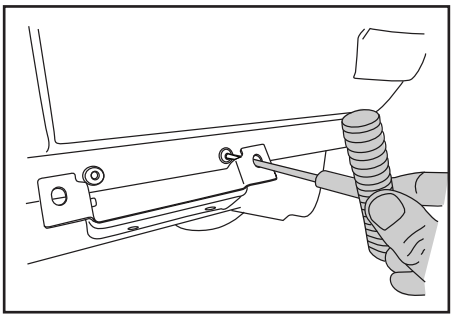

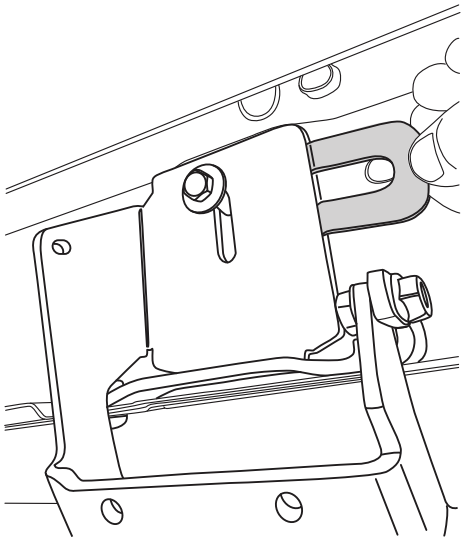

Front Mounting Bracket

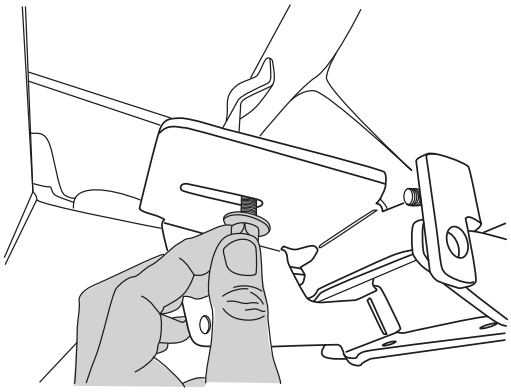

Rear Mounting Bracket

2

Slide 6 carriage bolts (16) into rail pocket of driver side rail (2). Add Light Bracket (26) to the 1st and 4th bolt counting from the front side. Insert Flange Nut (18) onto bracket tab to attach light brackets into position shown. Leave loose to allow for adjustment.

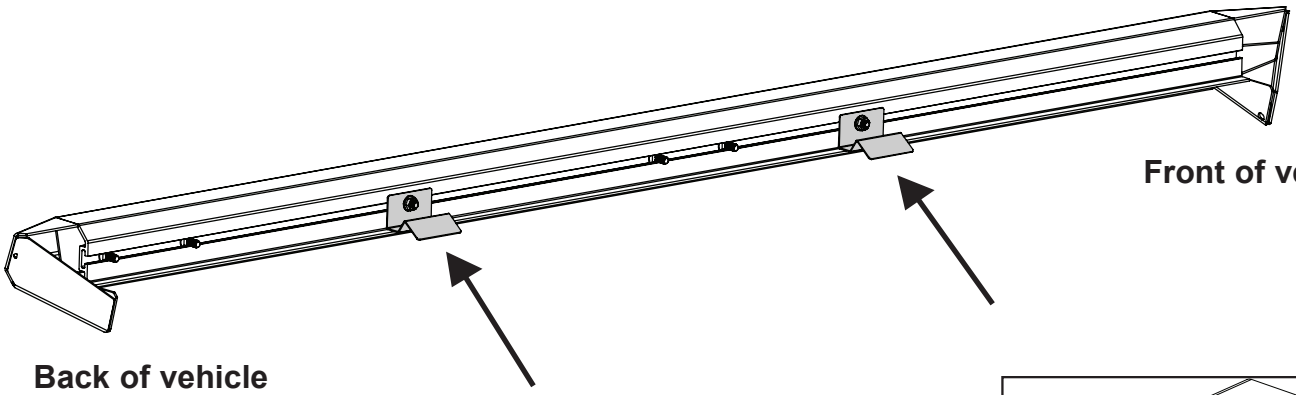

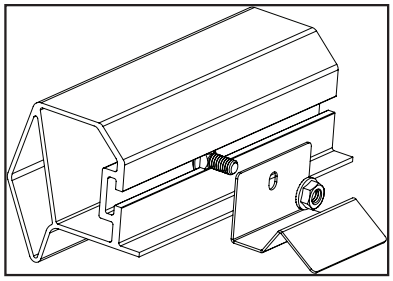

3

Adjust bolts and slide over brackets. Use supplied flange nuts and attach rail to brackets. Center rail between body rocker and torque 4 flange nuts to 16 ft-lbs. Assemble Flange bolt (14) with nut (18) thru support tab on bracket as shown.Torque to 16ft-lbs.

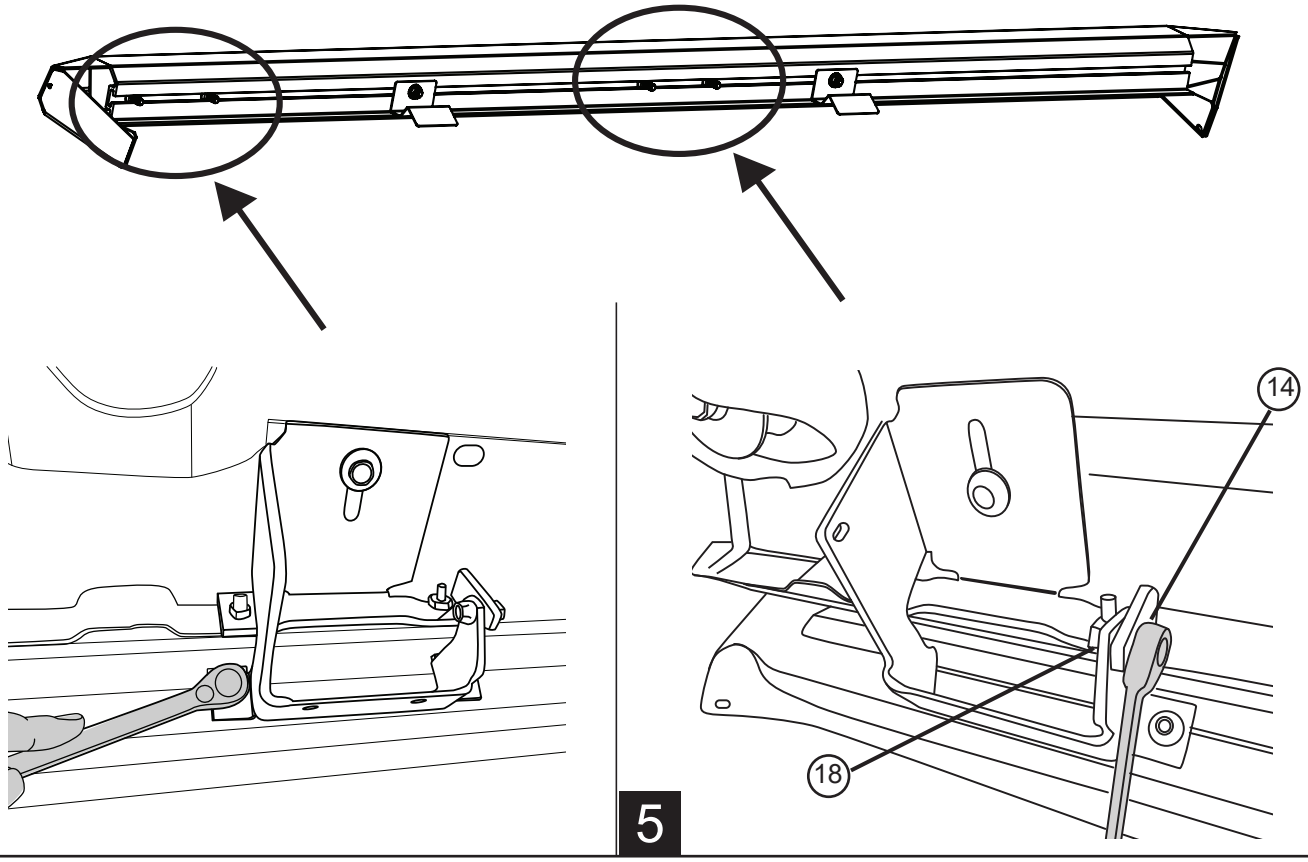

4

5

Attach front support bracket (28) by inserting carriage bolt (16) into rail and using supplied button head bolt (12), washer (20) and captive washer nut (19) to pinch weld. Torque bolts to 16ft-lbs.

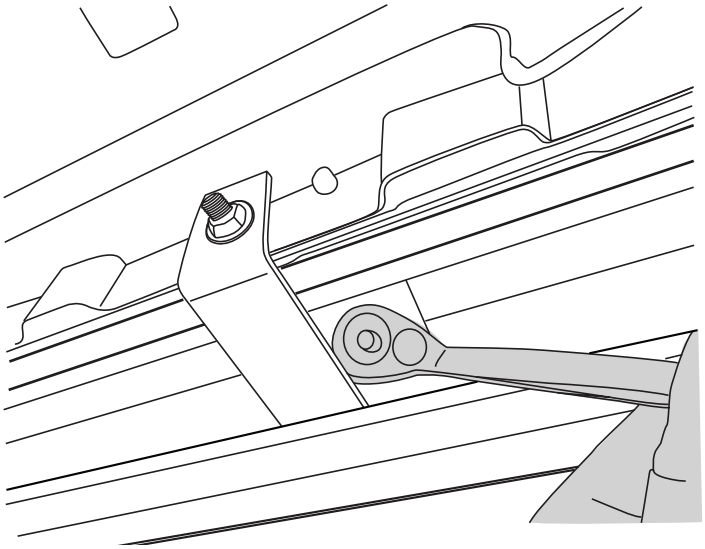

6

Mount front drive linkage onto driver side. Thread supplied M8 Hex bolts (17) into front drive linkage. Repeat step for Rear idler linkage. Do not tighten.

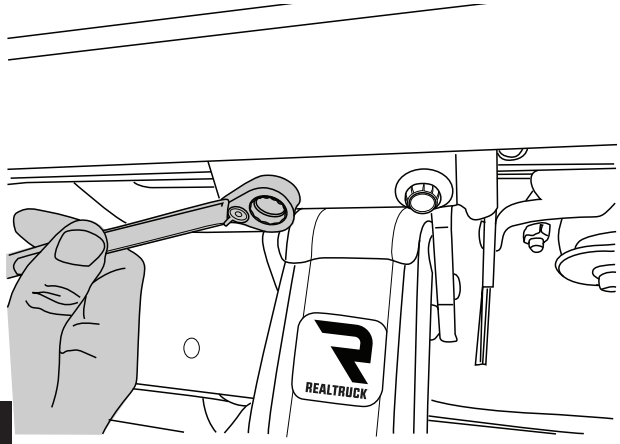

7

Install provided Upper Mount Spacer (21) and M6 Flange bolt (14) into upper mount as shown on both the drive and idler linkages. Do not tighten.

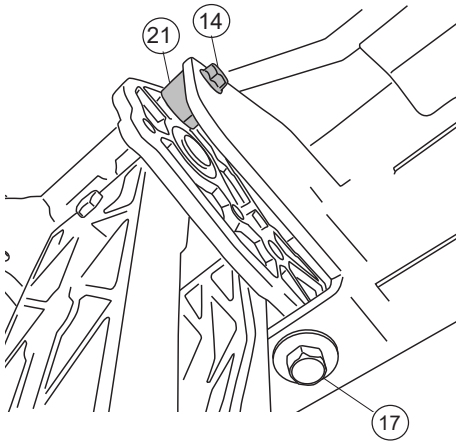

8

Slide mounting T-nut into position. Center board in rail pocket. Tighten fasteners to 10 ft-lbs.

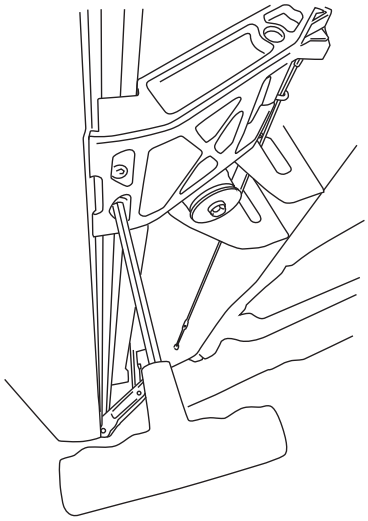

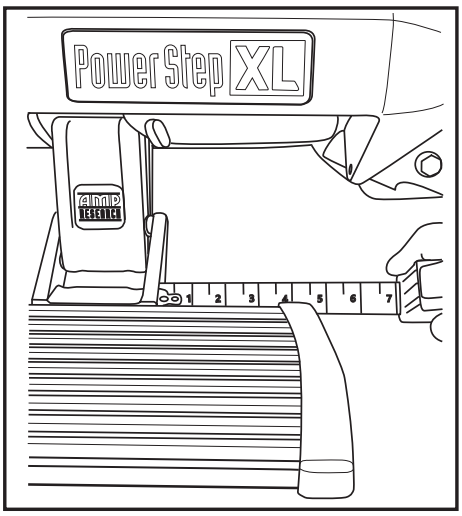

9

Using a 13mm socket Torque linkage M8 Hex bolts 4x (17) from step 5 to 16 ft-lbs. Next use a 10mm socket, torque linkage spacer Flange bolt 2x (13) from step 6 to 8 ft-lbs. Once linkages are tight cycle board to verify steps deploy under own weight.

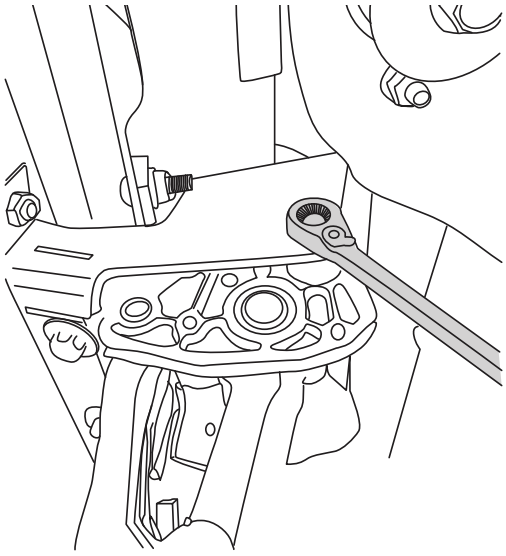

10

Gas Models follow steps 11 and 12 then go to step 17.

(Also inludes Rubicon 392 models)

Diesel models go to step 13. 4XE models go to step 15.

GAS MODELS ONLY: Prepare large tie-wraps (23) for mounting Power Step Controller (7). Loosely loop tie-wraps around large bundle of wires behind battery in engine compartment. Insert controller into tie-wrap loops and cinch down securely. The tie-wraps should cinch down into channels on controller surface. Connect power leads from Controller, Red to positive battery terminal and Black to the vehicle body ground as shown.

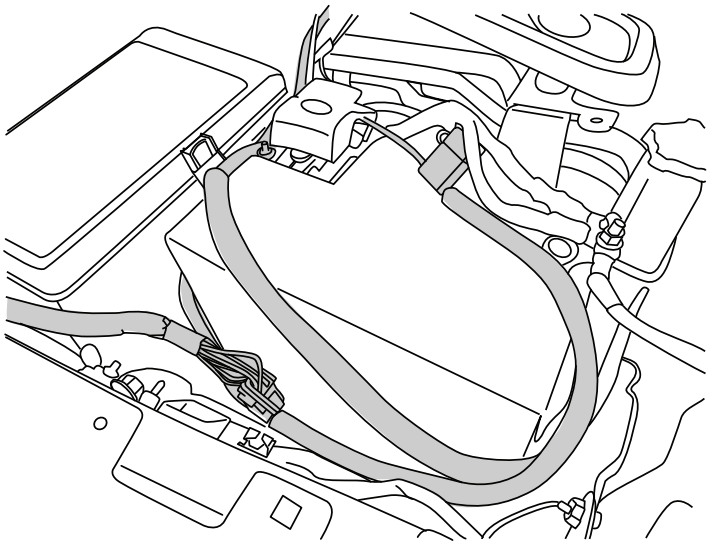

11

GAS MODELS ONLY: Route the two Wire Harness legs down over the wheel wells toward Motor Linkages, long leg across to the driver side. Secure harness with tie wraps (22).

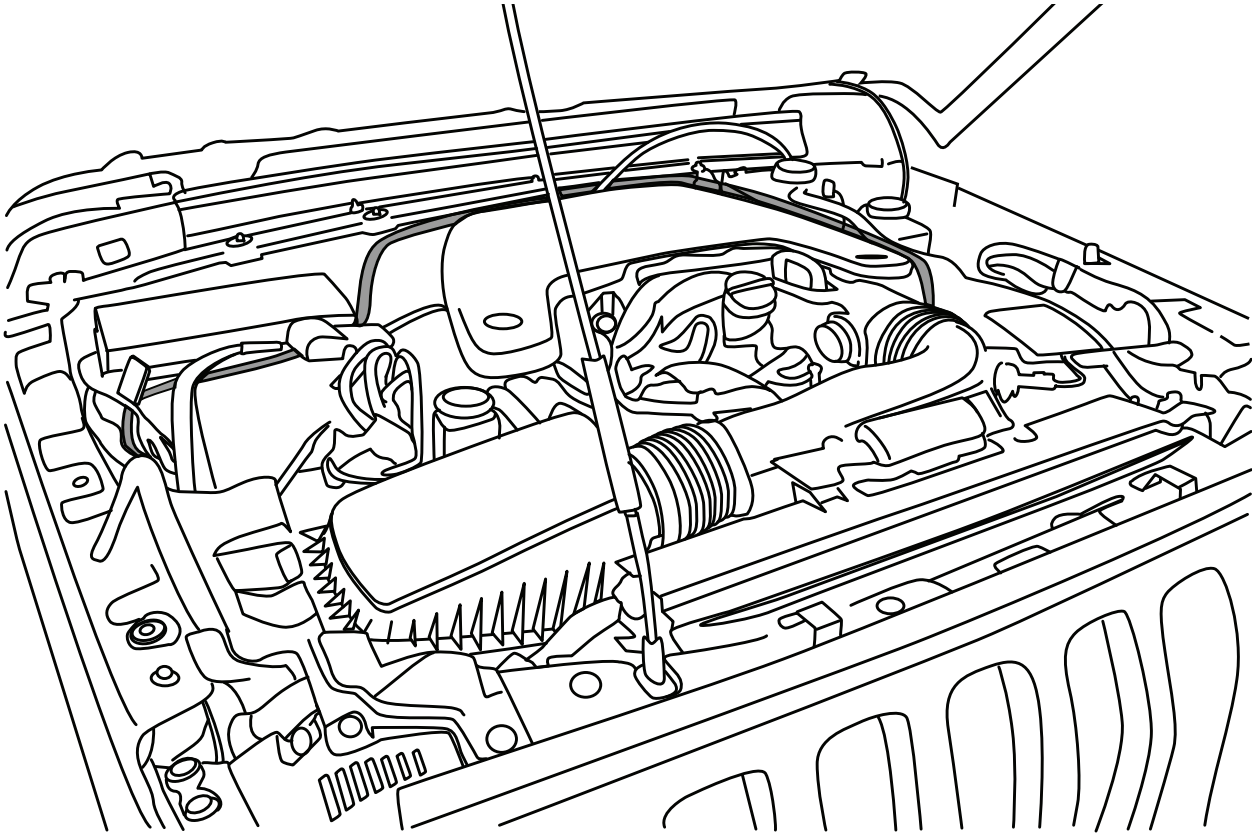

12

Diesel models follow steps 13 and 14.
Gas models go to step 17. 4XE models go to step 15.

DIESEL MODELS ONLY: Remove fuse from Power Step Wire Harness. Prepare large tie-wraps(23) for mounting Power Step Controller (7). Loosely loop tie-wraps around large bundle of wires behind battery in engine compartment. Insert controller into tie-wrap loops and cinch down securely. The tie-wraps should cinch down into channels on controller surface. Connect power leads from Controller, Red to positive battery terminal and Black to the vehicle body ground as shown.

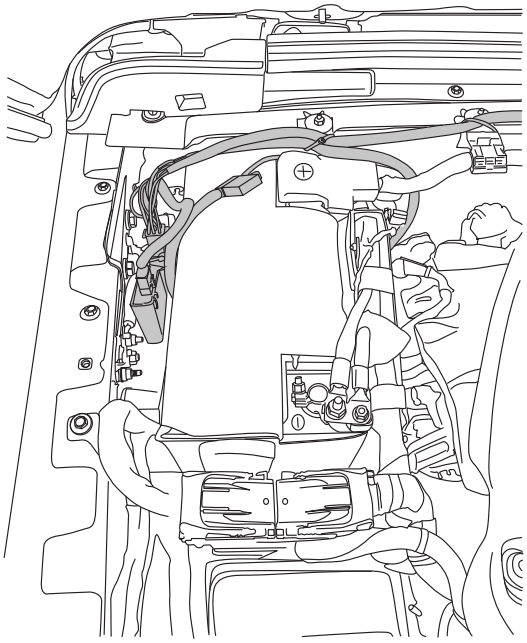

13

DIESEL MODELS ONLY: Route longer harness Leg across to driver side . Secure harness to cowl with tie wraps (22) to keep harness away from hot engine components. Next route harness under Coolant recovery tank then down and to the outside of the frame rails. Route shorter harness leg down the passenger side ensuring the harness is run to the outside of the frame rails and away from any hot exhaust components. Secure harness with tie wraps (22).

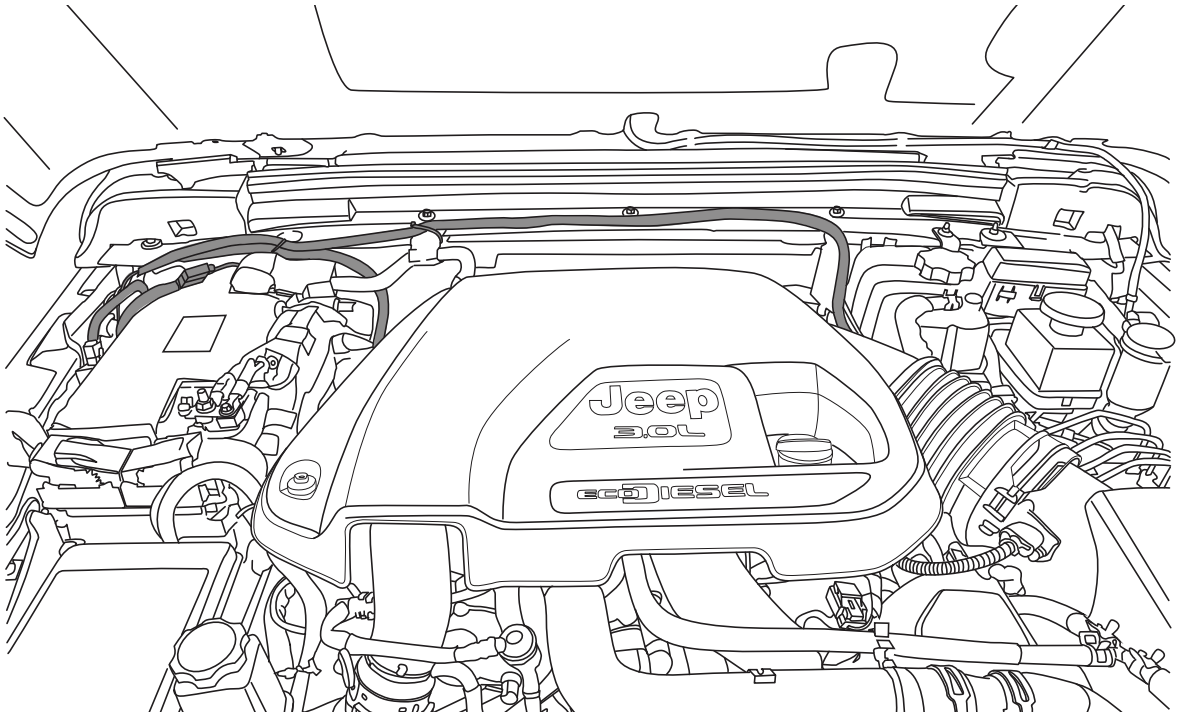

14

4XE Models ONLY, follow steps 15 and 16 then proceed to step 17.

4XE MODELS ONLY: Remove fuse from Power Step Wire Harness. Prepare large tie-wraps (23) for mounting Power Step Controller (7). Loosely loop tie-wraps around large bundle of wires behind battery in engine compartment. Insert controller into tie-wrap loops and cinch down securely. The tie-wraps should cinch down into channels on controller surface. Connect power leads from Controller, Red to positive battery terminal and Black to the vehicle body ground as shown.

Remove fuse from Power Step Wire Harness.

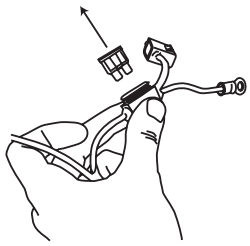

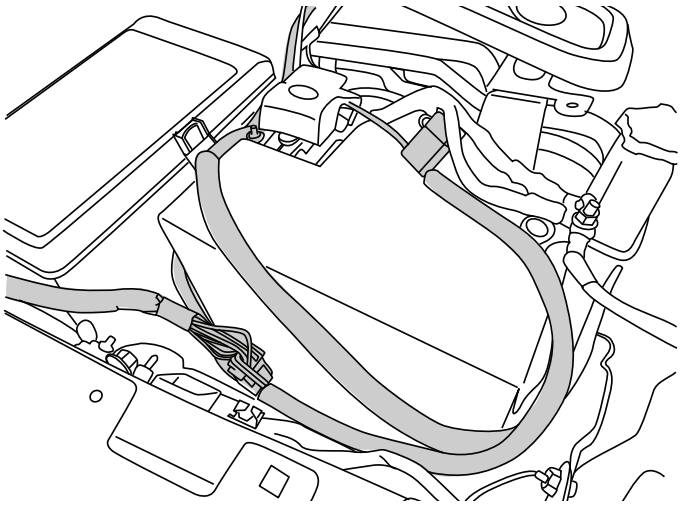

15

4XE MODELS ONLY: Route longer harness Leg across to driver side. Secure harness to cowl with tie wraps (22) to keep harness away from hot engine components. Next route harness under Coolant recovery tank then down and to the outside of the frame rails. Route shorter harness leg down the passenger side ensuring the harness is run to the outside of the frame rails and away from any hot exhaust components. Secure harness with tie wraps (22).

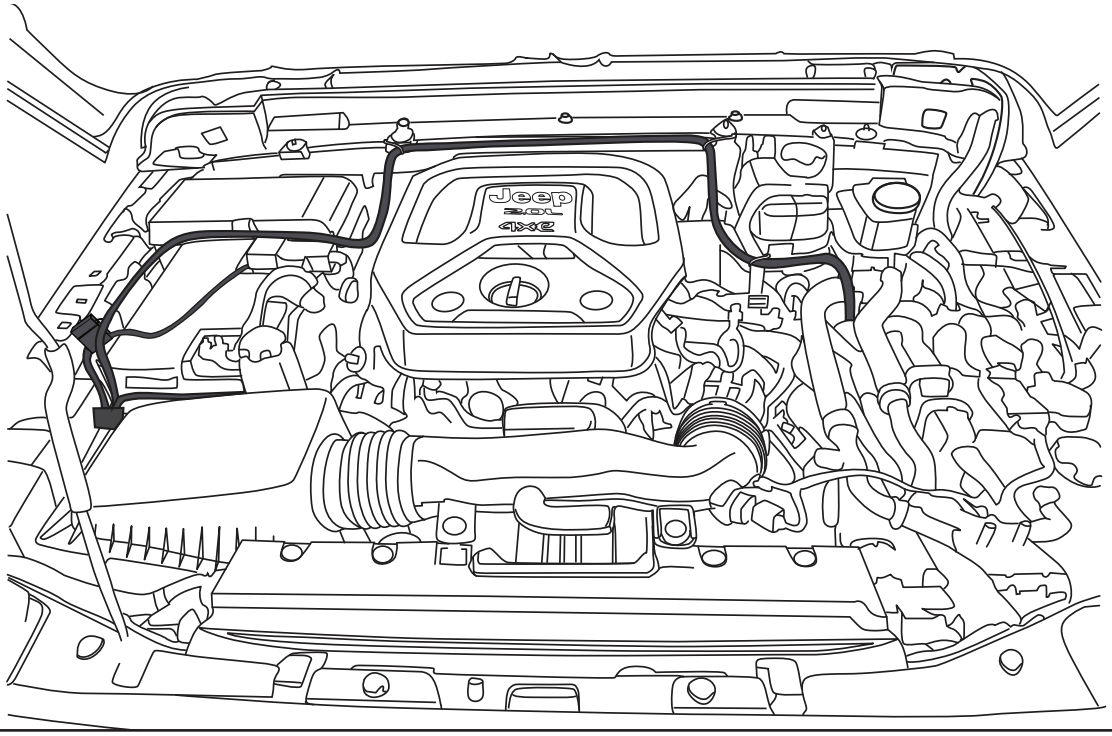

16

Press and release glove box safety tab to fully open and remove glove box, next, release glox box dampener located on the left side.

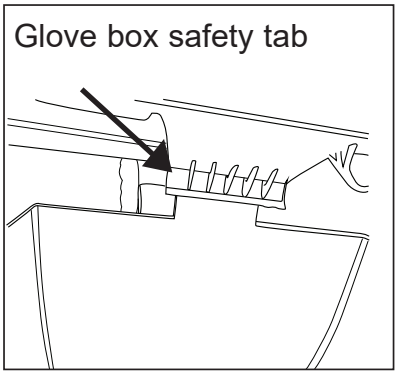

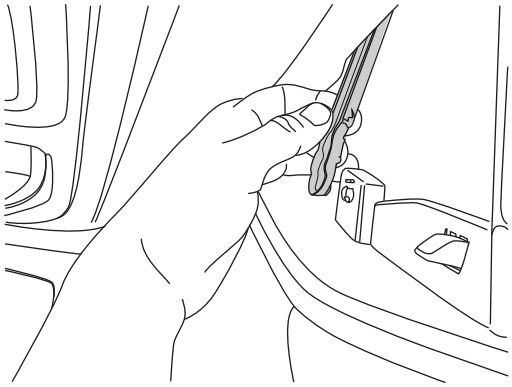

17

Carefully leave glove box hanging to expose plugs behind it.

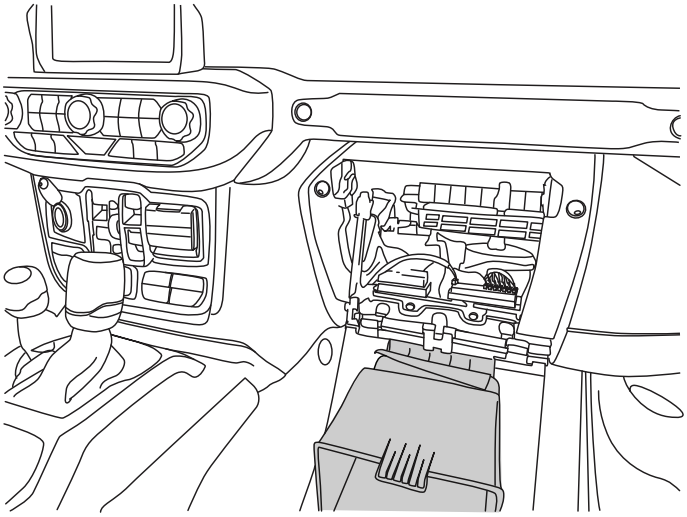

18

Locate white block (on right side) and plug the 2 pin connector from the OBD module extension (9) into that port.

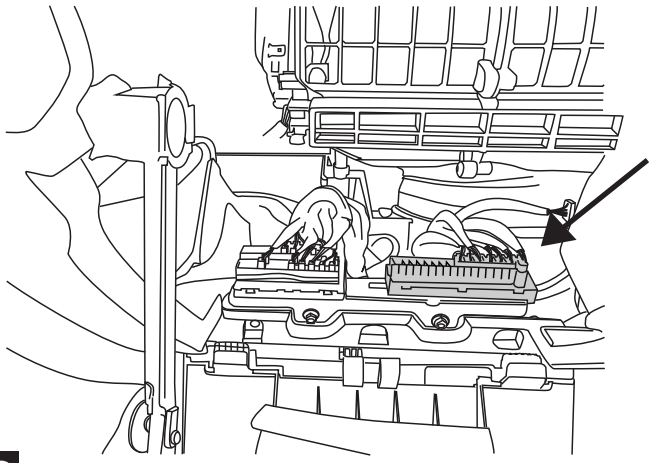

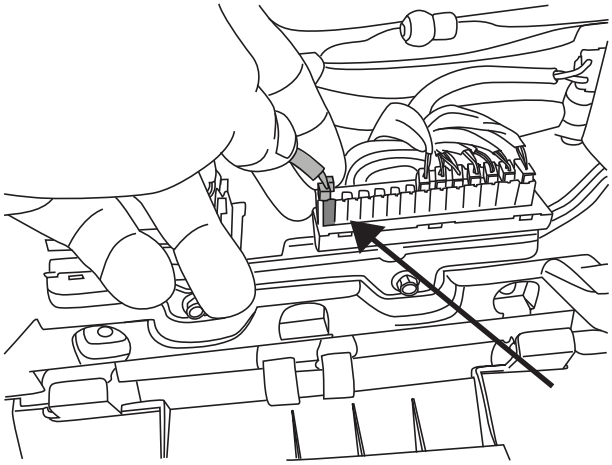

19

Pull back carpet on passenger side on the top side of middle console and then use provided Tube (10) to route OBD II Extension (9) behind middle console. Tape open end of extension to the tube and push the tube through middle console.

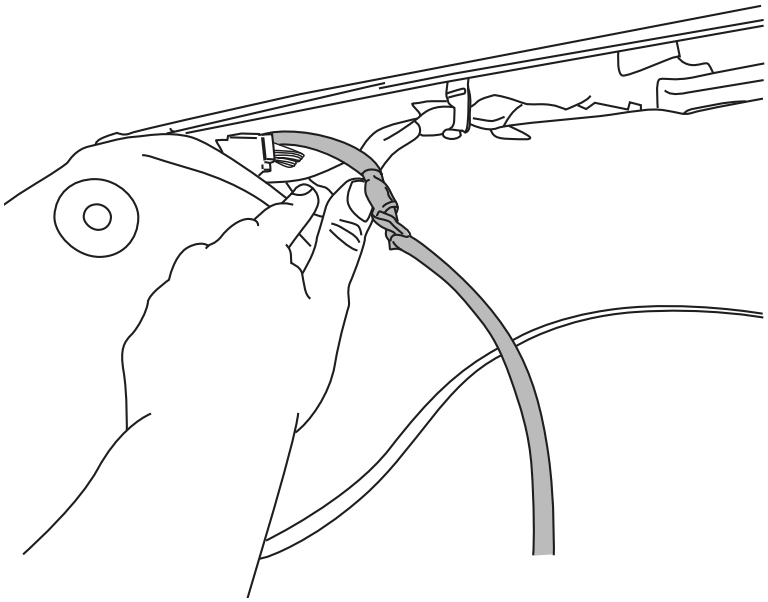

20

From driver side, pull tube (10) that was pushed through from passenger side.

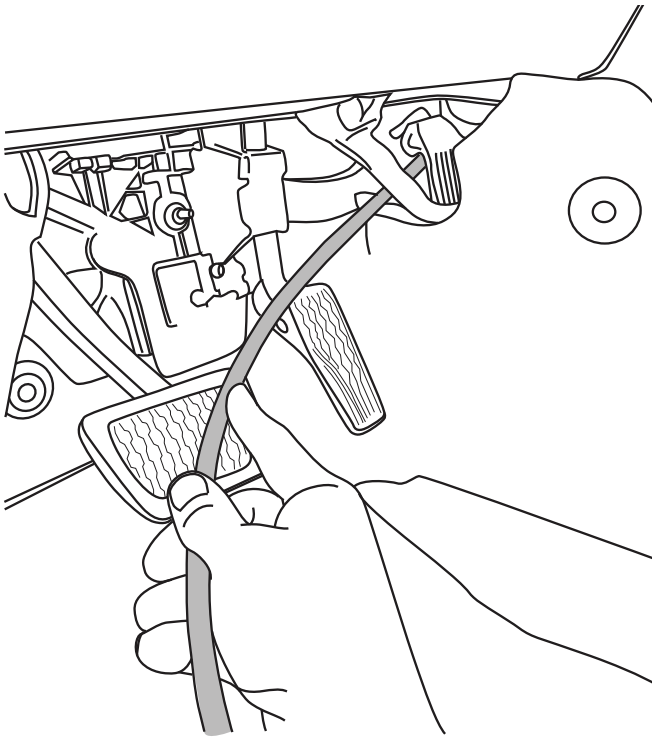

21

Remove OBD II Extension (9) from tube (10) and plug wire (9) to OBD module (8) wire.

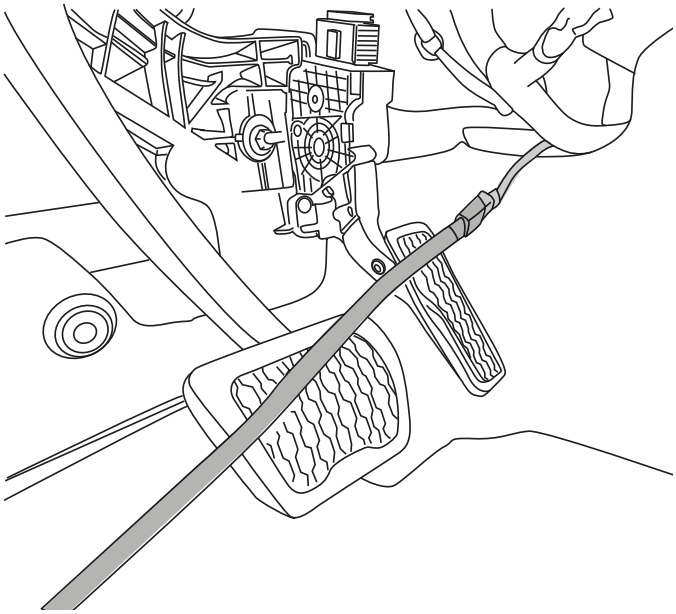

22

Route trigger wires through firewall. Locate round plastic plug on firewall to the left of the brake assembly. Drill small hole using a 3/16 drill bit. Route trigger wires (6) through firewall. Use supplied posi-lock® (11) to connect wires to OBD Module (8).

Note: 2026 Models may require drilling (use 1/4” drill bit) through plastic firewall plugs to feed trigger wire (yellow wire) from engine bay into cab.

Apply silicone to seal off firewall.

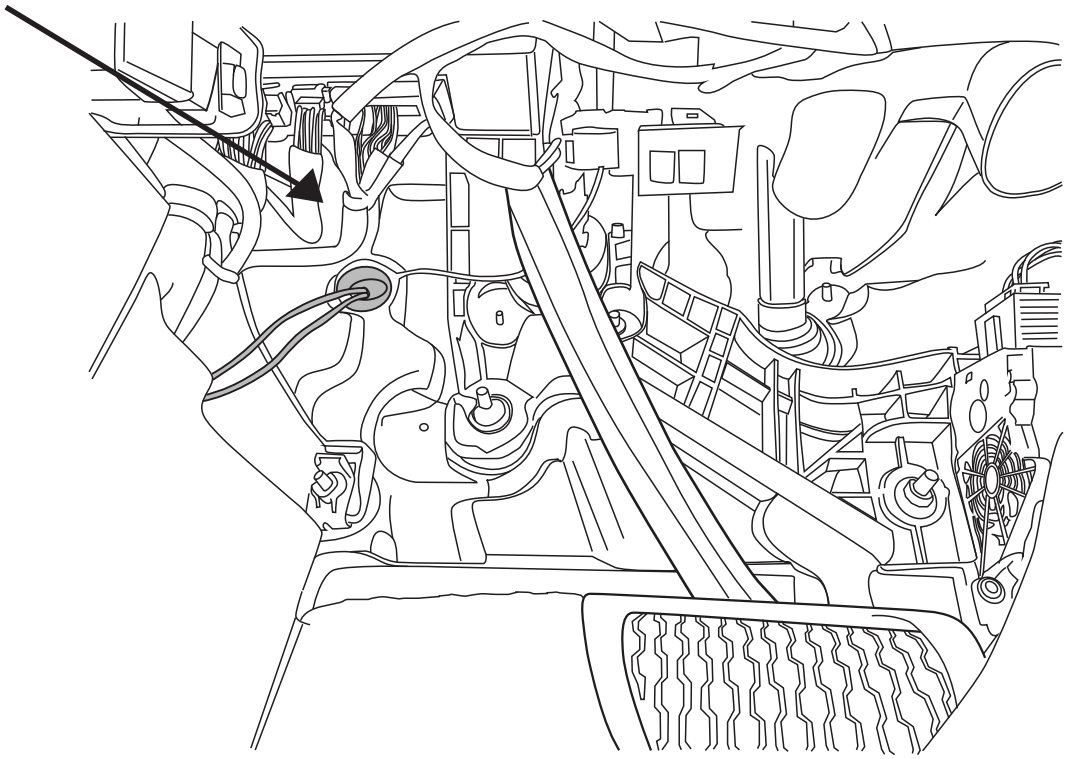

23

Use cable ties (22) to secure all wires in place. Plug in OBD Module (8).

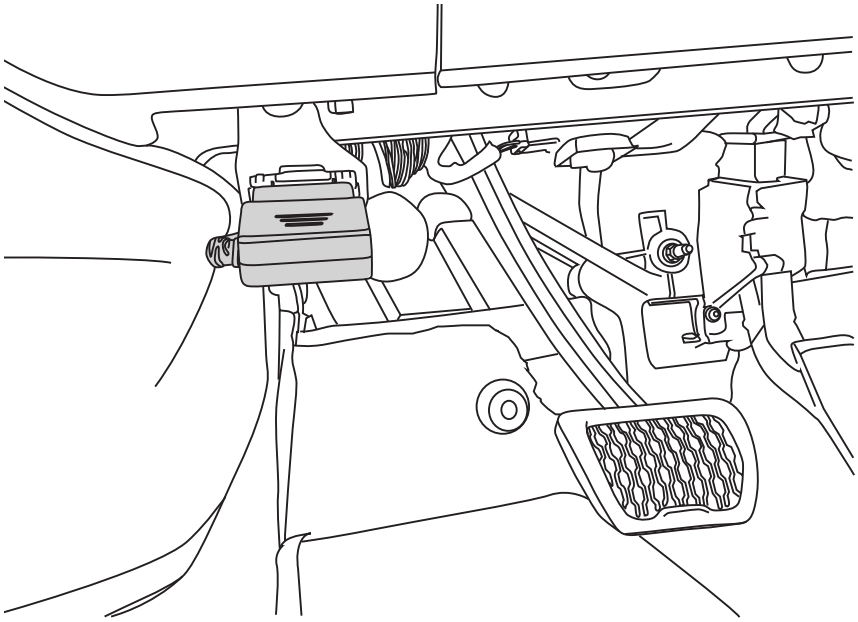

24

OBD II install: Use Supplied Posi-Lock® connectors to attach the Plug and Play Module to the Harness. Attach matching colors on the harness to the wires on the module. Plug in module to OBD II port on the vehicle. Secure harness with supplied tie wraps.

Note: If the OBD II pass thru harness (76404-01A) was purchased see install sheet supplied in packaging. The pass through harness allows for an open port for other accessories. See below for a brief description.

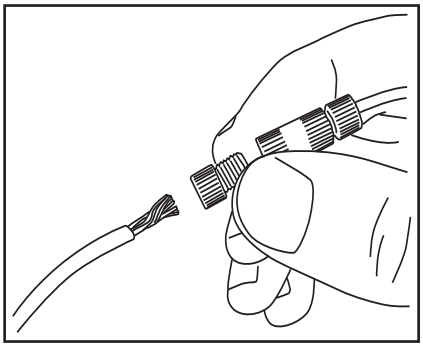

OBD II Connector located below steering column.

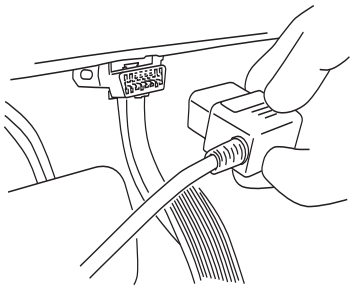

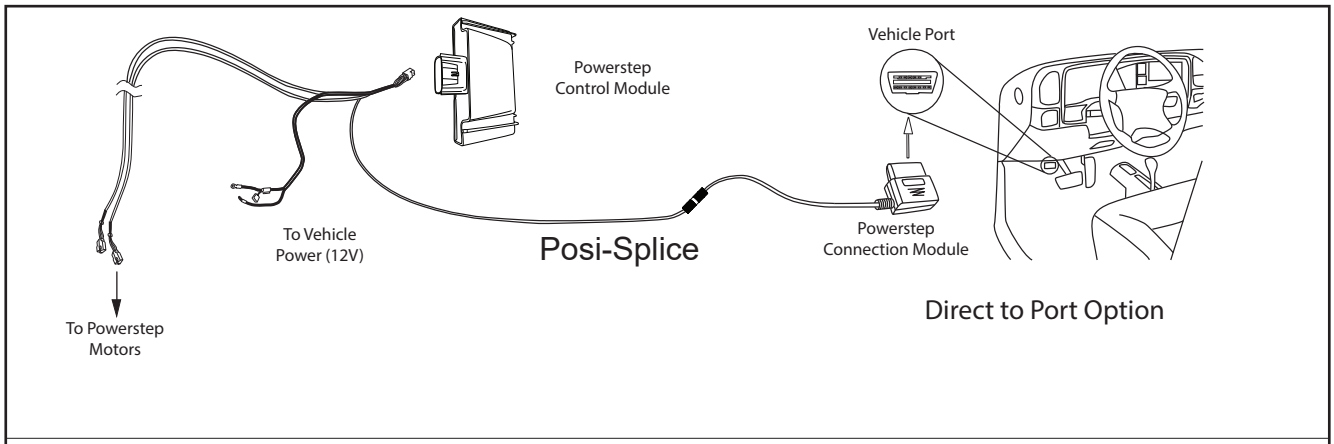

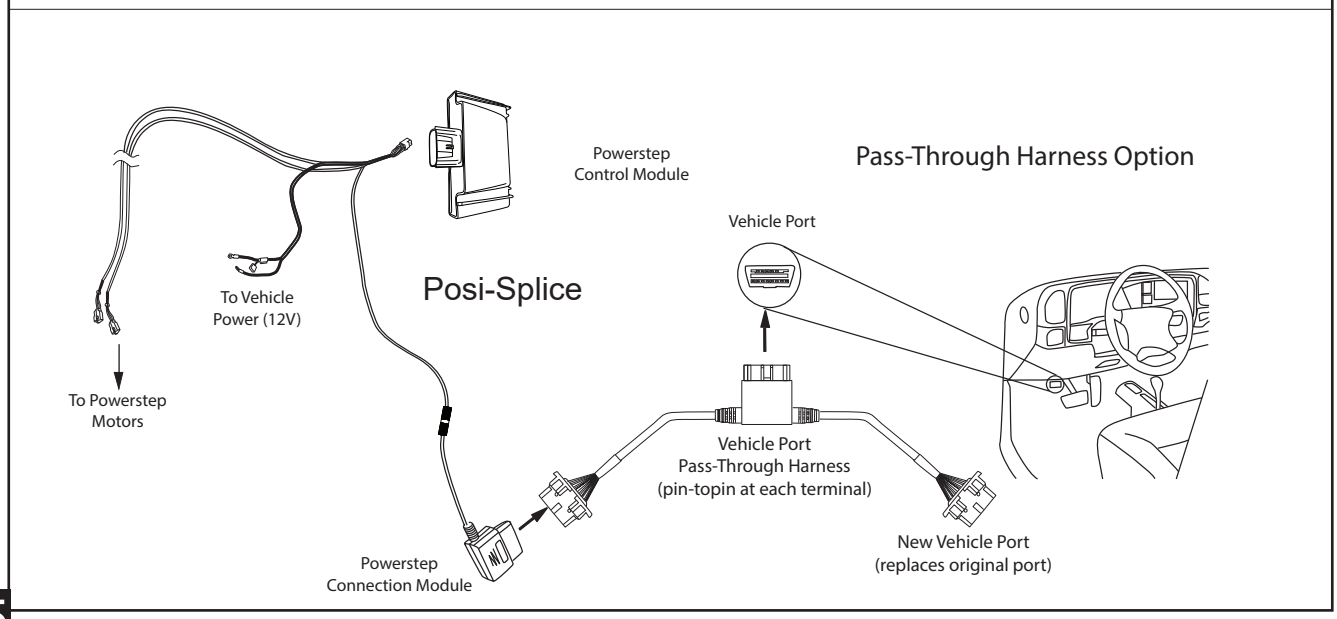

Before proceeding, see spin direction of the each motor than proceed with step A or B below. Use Method A for Driver & Passenger motors.

A. Motor spinning the shaft clockwise direction:

1) First, install one Posi-Tite® (8) onto white wire from the motor. See image on right.

2) Install second Posi-Tite® (8) onto orange wire from motor. See image on right.

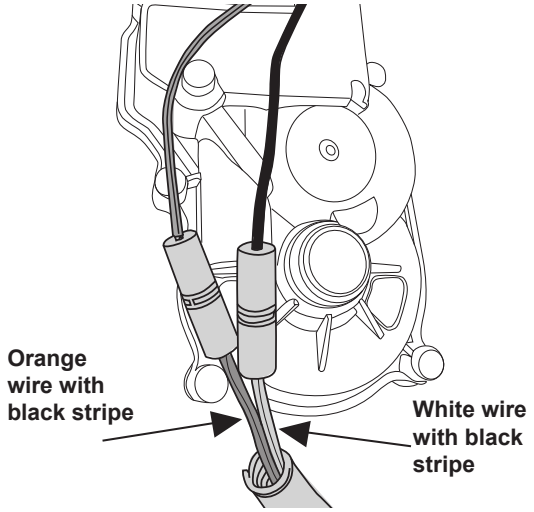

3) Next, connect the white wire with black stripe from the wire harness to the other end of the Posi-Tite® (8) that is connected to the all white wire from first step above.

4) Connect the Posi-Tite® (8) the orange wire from the motor with the orange with black stripe wire from the harness.

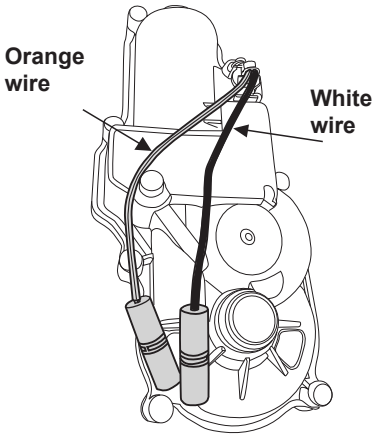

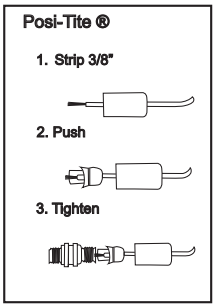

B. Motor spinning the shaft counter clockwise direction:

1) First, install one Posi-Tite® (8) onto white wire from the motor. See image on right.

2) Install second Posi-Tite® (8) onto orange wire from motor. See image on right.

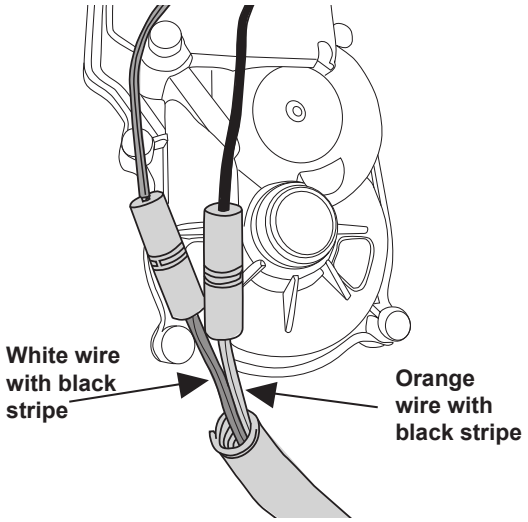

3) Next, connect the orange wire with black stripe from the wire harness to the other end of the Posi-Tite® (8) that is connected to the all white wire from first step above.

4) Connect the Posi-Tite® (8) the orange from the motor with the white with black stripe wire from the harness.

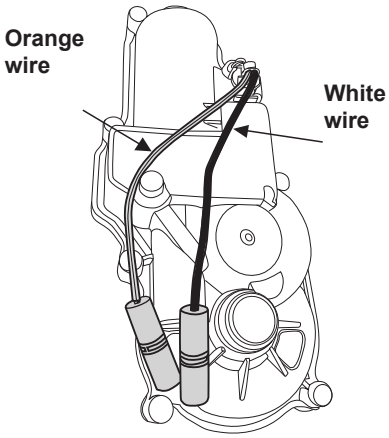

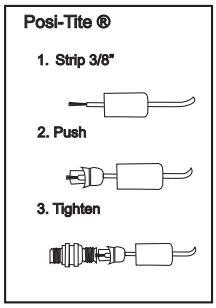

Affix LED lamp (25) to Light bracket (26) on rail. Slide bracket into desired position and tighten using 5/32” Allen key.

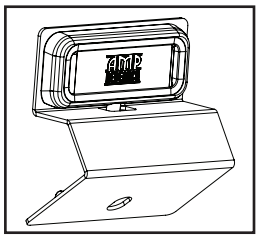

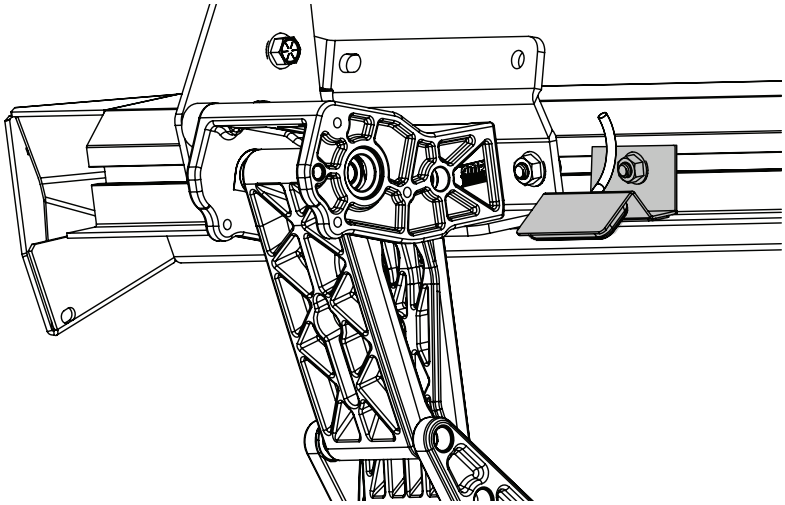

27

Using supplied butt connectors, connect the lamp wires. Red to Red, Black to Black. Once Crimped use heat gun to shrink tube. Close and wrap conduit with electrical tape. Secure all loose wires with cable ties. Pull lamp wires upward to avoid any wire snagging.

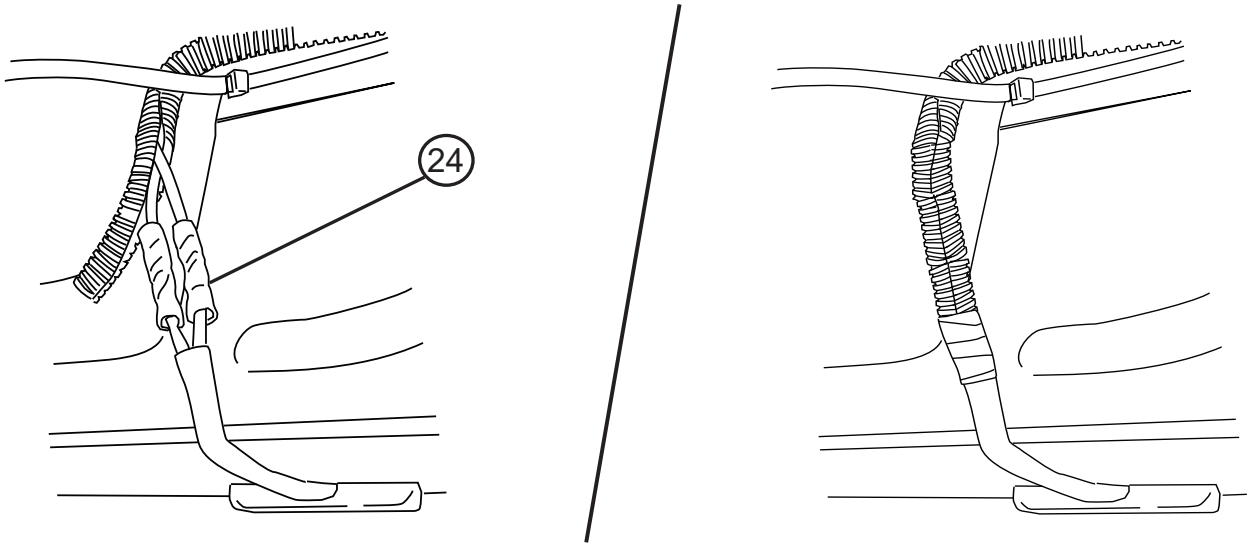

28

Reinstall fuse from Power step wire Harness (6).

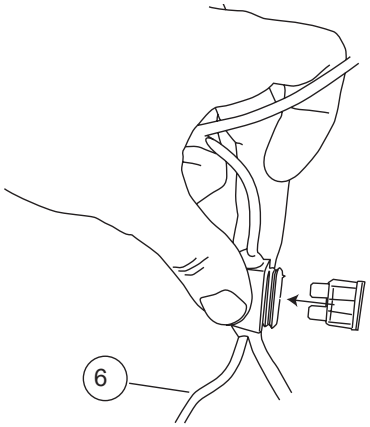

29

Check that all doors activate the Power Step and the LED Lights work when doors open and close. Reinstall any remaining trim panels.

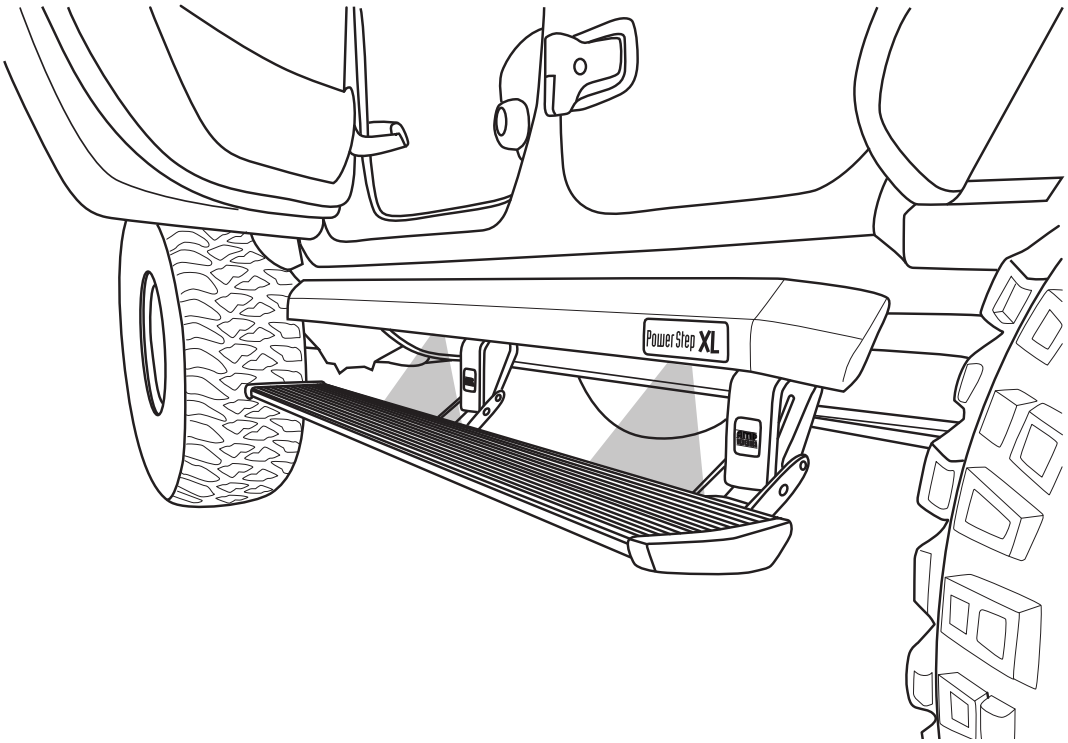

FINAL SYSTEM CHECK

Check that all doors activate the PowerStep and the LED lights work when doors open and close.

NORMAL OPERATION: When the doors open, PowerStep automatically deploys from under the vehicle. When the doors are closed, PowerStep will automatically return to the stowed/retracted position. ***Note that there is a 2-second delay before the PowerStep returns to the stowed/retracted position.***

CORRECT OPERATION OF LIGHTS: All four lamps will illuminate upon opening any door of vehicle. Lamps will stay on until restowing of both Power Steps or until 5 minutes has expired with the doors open. When the lights timeout after 5 minutes, they can be reillumintated by closing and opening any door of vehicle.

AMERICAN DESIGNED & ENGINEERED

Thank you for your recent RealTruck purchase.

REGISTER YOUR PRODUCT TODAY FOR FASTER SERVICE & PRODUCT UPDATES

Please visit:
https://realtruck.com/warranty-registration/
or scan the QR Code

SCAN ME

Product Registration Benefits:

• Ensure we have your purchase receipt and product info in our system which is required for warranty.

• Faster and easier access to customer service and tech support in the unlikely event you need warranty or product support.

• Registration helps us keep you up to date on product information and offers.

To view other RealTruck products that may be offered for your vehicle.

Please visit: www.realtruck.com

REALTRUCK AMP RESEARCH Power Step

Congratulations on your purchase of the genuine RealTruck / AMP Research PowerStep! Here's what you should know...

POWER-DEPLOYABLE RUNNING BOARDS OPERATION: RealTruck / AMP Research PowerStep running boards automatically move when the doors are opened to assist entering and exiting the vehicle.

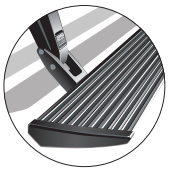

Automatic power deploy:
The running boards will extend down and out when the doors are opened.

Automatic power stow:
The running boards will return to the stowed position when the doors are closed. There will be a 2-second delay before the running boards move to the stowed position.

Automatic stop:
If an object is in the way of the moving running board, the running board will automatically stop. To reset, clear any obstruction, then simply open and close the door to resume normal operation.

Manually set in the deployed (OUT) position for access to the roof:
The running boards can be manually set in the deployed position by firmly holding the step down with your foot while at the same time closing the door. To resume normal operation, open and close the door.

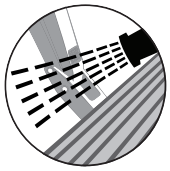

Maintenance: In adverse conditions, debris such as mud, dirt, and salt may become trapped in the running board mechanism, possibly leading to unwanted noise. If this occurs, manually set the running boards to the deployed position and flush the front and rear hinge arms with a high-pressure car wash wand. Avoid spraying the motors directly. After washing, apply silicone spray lubricant to the hinge pivot pins. Do not apply silicone, wax or protectants like Armor All® to the running board stepping surface.

Caution! Keep hands away when the running board is in motion.

5-YEAR LIMITED WARRANTY

RealTruck / AMP RESEARCH warrants this product to be free from defects in material and workmanship for FIVE (5) YEARS FROM DATE OF PURCHASE, provided there has been normal use and proper maintenance. This warranty applies to the original purchaser only. All remedies under this warranty are limited to the repair replacement of the product itself, or the repair or replacement of any component part thereof, found by the factory to be defective within the time period specified. The decision to repair or replace is wholly within the discretion of the manufacturer.

This warranty specifically excludes labor. If you have a warranty claim, first you must call our factory at the number below for instructions. You must retain proof of purchase and submit a copy with any items returned for warranty work. Upon completion of warranty work, if any, we will return the repaired or replaced item or items to you freight prepaid. Damage to our products caused by accidents, fire, vandalism, negligence, misinstallation, misuse, acts by nature or by defective parts not manufactured by us, is not covered under this warranty.

ANY IMPLIED WARRANTIES OF MERCHANTABILITY AND/OR FITNESS FOR A PARTICULAR PURPOSE CREATED HEREBY ARE LIMITED IN DURATION TO THE SAME DURATION AND SCOPE AS THE EXPRESS WRITTEN WARRANTY. OUR COMPANY SHALL NOT BE LIABLE FOR ANY INCIDENTAL OR CONSEQUENTIAL DAMAGE.

Some states do not allow limitations on how long an implied warranty lasts, or the exclusion or limitation of incidental or consequential damages, so the above limitations or exclusions may not apply to you. This warranty gives you specific legal rights, and you may also have other rights that vary from state to state.

FOR WARRANTY ISSUES WITH THIS PRODUCT PLEASE CALL REALTRUCK TECH SUPPORT 1-888-983-2204

WARNING

Be sure to read and precisely follow the provided instructions when installing this product. Failure to do so could place the vehicle occupants in a potentially dangerous situation. After installing or reinstalling, re-check to insure that the product is properly installed.

The material that your product is made from can be recycled. Please also consider recycling the packaging that your product came in.