Power Step

APPLICATION	MODEL YR	PART #
Chevrolet Suburban, Tahoe	2021 - 2026	76327-01A
GMC Yukon, Yukon XL	2021 - 2026	76327-01A
Escalade, Escalade ESV	2021 - 2026	76327-01A

* Modification required to running board assembly. See Item 1 on page 3.

INSTALLATION GUIDE

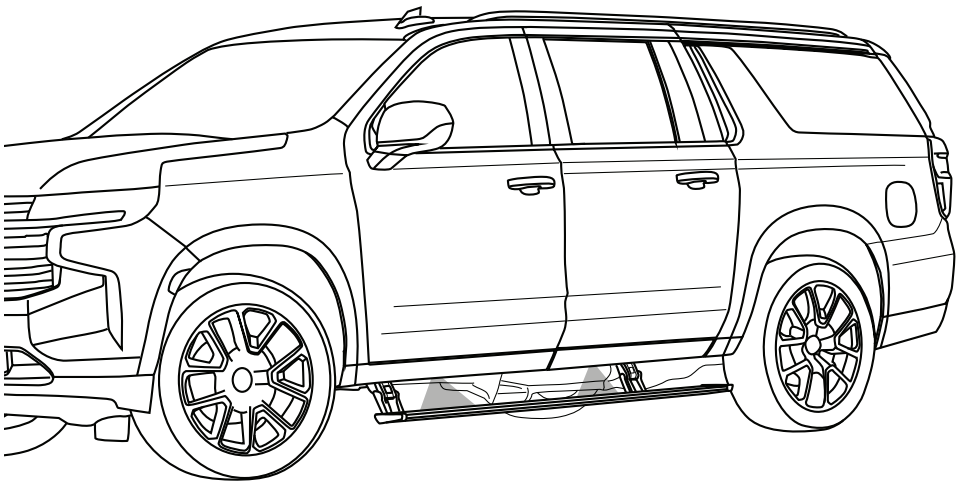

INSTALLATION TIME
3-5 Hours
Professional installation recommended

SKILL LEVEL
1 2 3 4
4= Experienced

TOOLS REQUIRED
- ❑ Safety goggles
- ❑ Measuring tape
- ❑ 1/8”, 9/32” Drill bits
- ❑ 10 mm socket
- ❑ 13 mm socket
- ❑ 13 mm ratchet wrench
- ❑ Ratchet wrench and extension
- ❑ Wire crimpers
- ❑ Wire stripper / cutter
- ❑ 3/16” hex key wrench (allen wrench)
- ❑ 4mm allen wrench
- ❑ Electrical tape
- ❑ Weather proof caulking (silicone sealer)
- ❑ Drill Motor
- ❑ Heat Gun

WARRANTY
5-Year Limited Warranty

REALTRUCK TECH SUPPORT 1-888-983-2204 (Press 2) Monday - Friday, 8:00 AM - 5:00 PM EST

Designed and manufactured by RealTruck AMP Research® • Made in Mexico
Patent Protected. Please see our product site for applicable patents. www.realtruck.com/b/amp-research/
© RealTruck Group, Inc., 2026 • Five-year limited warranty. • Professional installation is recommended.

INSTALLATION GUIDE
Attaching motor to Linkage assembly

EXPLODED VIEW

- Motor kit
- Socket cap screws
- Motor Linkage assembly

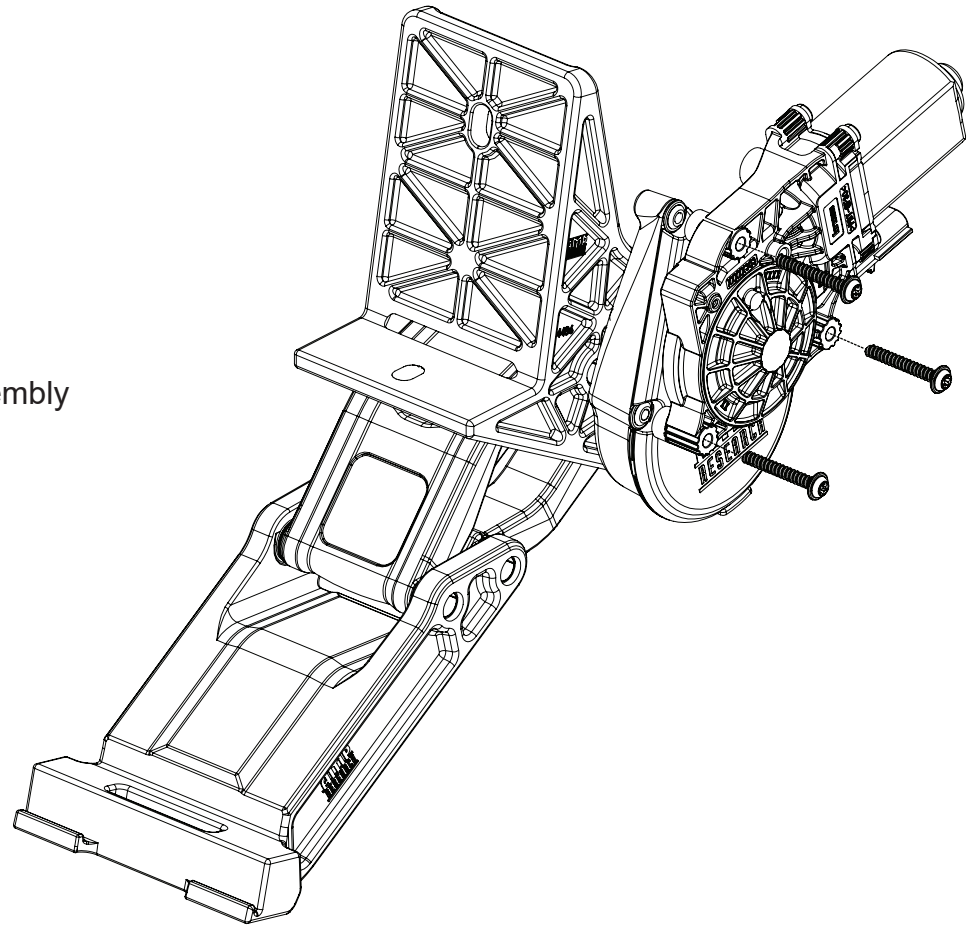

CAUTION: HANDLE WITH CARE.
The motor must be put on in step 15 after the linkage is tightened to the body of the vehicle.

To ensure our customers receive all components with full integrity, we pack the motors separate from their Linkage assemblies. This requires that the installer position and fasten the motor before continuing with the install. Please follow the instructions below and handle the assembly carefully.

CAUTION: Dropping the assembly or any excessive impact MAY cause damage to the motor.

Instructions:

1. Position the gear cover in place as shown if not already in place.

2. Seat motor into position on the three mounting bosses. This may require an adjustment of the gear by moving the swing arms.

3. After seating into place, fasten the motor with the three motor mount screws with 4mm Hex Head. Tighten screws to 36 in-lbs (4N-m). **Do not over torque.**

PARTS LIST AND HARDWARE IDENTIFICATION

Note: Some Applications require modification.

Application	Cut Length
Suburban/Yukon XL/ Escalade/ Escalade ESV	79” (No Modification Required)
Tahoe/Yukon	72” (Trim 7”)

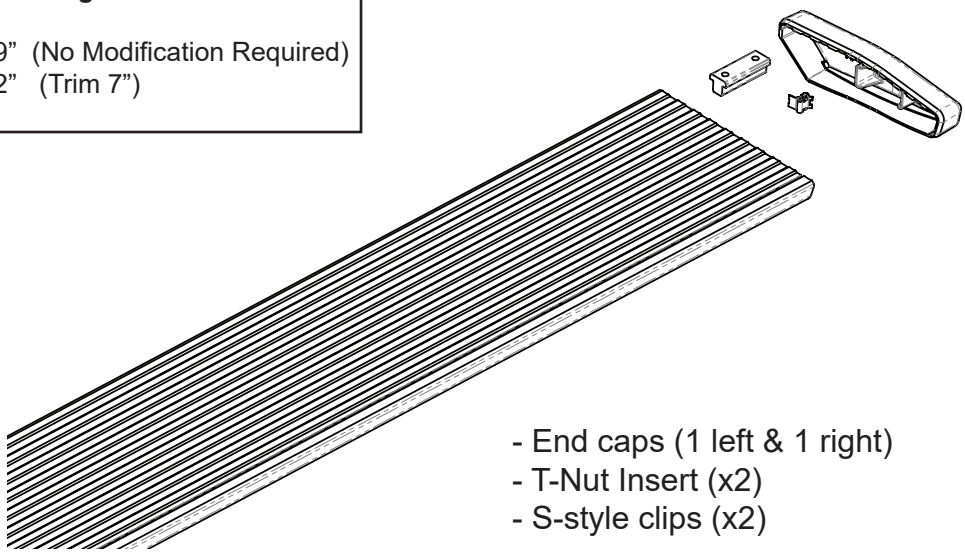

1 x2
Running Board assembly

- End caps (1 left & 1 right)
- T-Nut Insert (x2)
- S-style clips (x2)

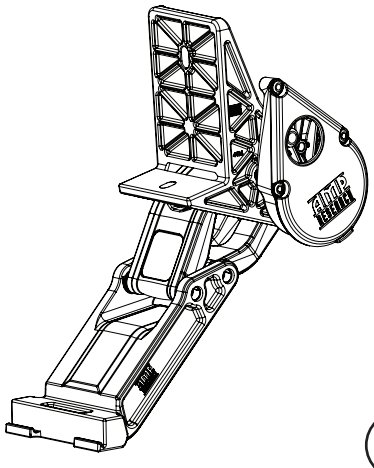

2 Front Driver Side Motor Linkage

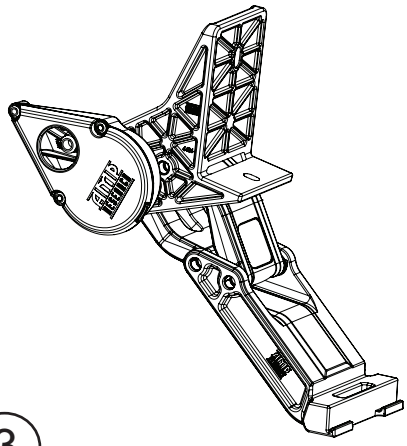

3 Front Passenger Side Motor Linkage

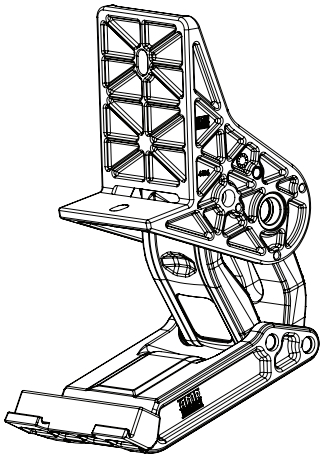

4 x2
Rear Idler Linkage Assembly

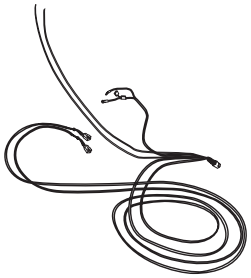

5 Wire Harness

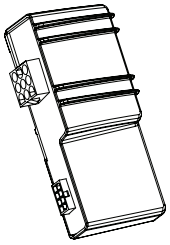

6 Controller STA

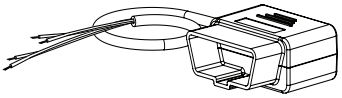

7 OBD II Plug

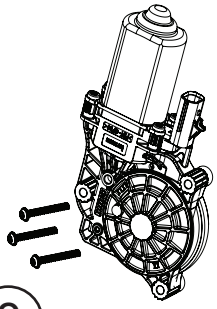

8 x2
Motor kit

PARTS LIST AND HARDWARE IDENTIFICATION

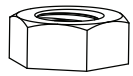

9 M8 Nut

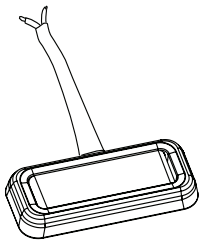

10 x4 LED Lamp

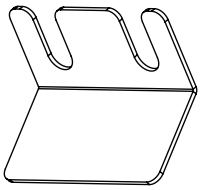

11 x4 Light bracket

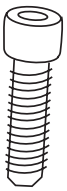

12 x8 Socket Cap Screw

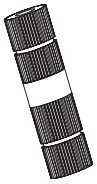

13 x2 Posi-Lock™ (Grey)

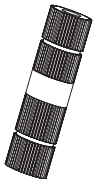

14 x2 Posi-Tap™ (Red/Grey)

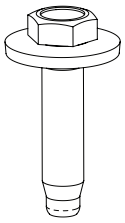

15 x12 Conical Washer Bolt

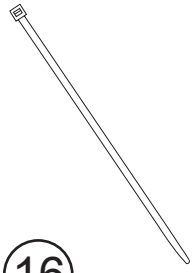

16 x20 Cable Tie 7”

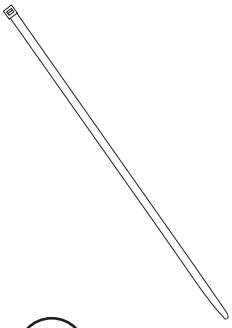

17 x2 Cable Tie 11”

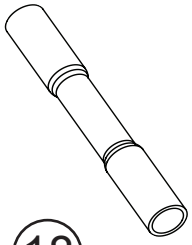

18 x8 Butt Connector

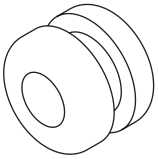

19 Grommet

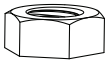

20 x4 M6 Nut

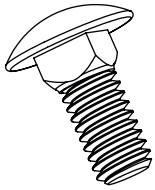

21 x2 5/16-18 Carriage Bolt

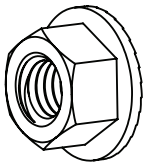

22 x2 5/16-18 Flange Nut

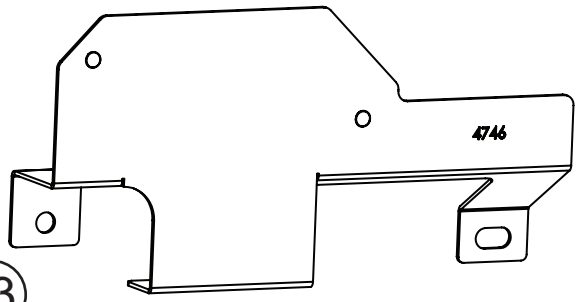

23 Harness relocation bracket

Locate harness bracket on driver side of vehicle. Location is near the rear driver door of the vehicle.

This bracket will be replaced with the Harness relocation bracket (23).

To remove, first remove wire harness clip out on left side of bracket (clip shown on image to the right).

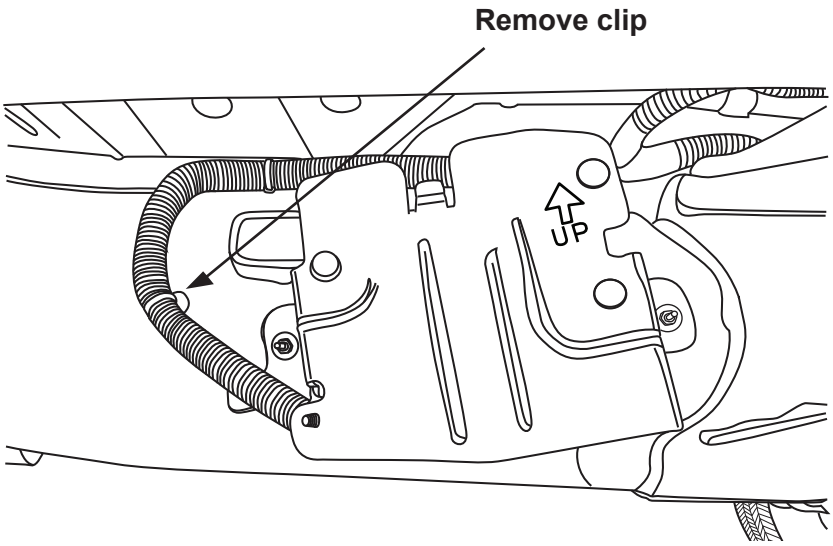

1

Use provided M6 nut (20) and double nut onto each protruding stud. Use nuts to turn studs in and loosen from the frame.

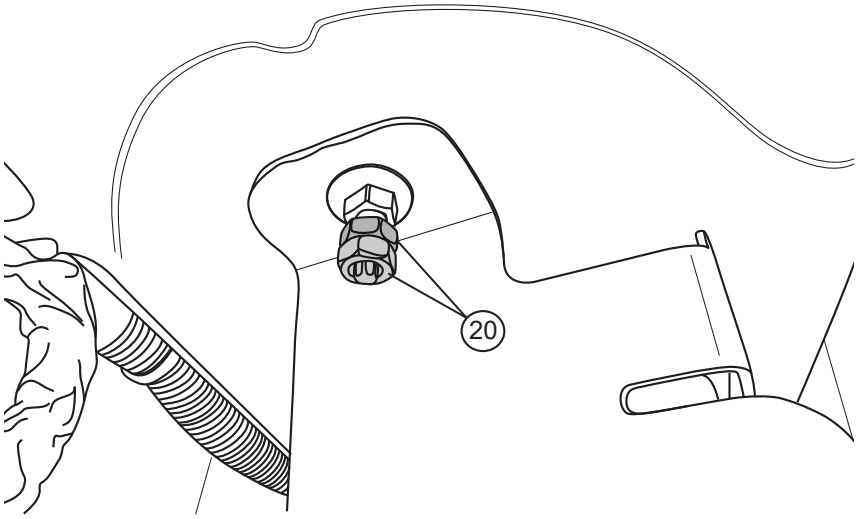

2

Once attachment studs are loose, lift and remove from frame. Remove harness by removing wire harness clip from location attached to bracket. Next, remove control box from bracket by using a 10mm socket or wrench on the 2 nuts.

Note: Save nuts for reassembly to supplied bracket.

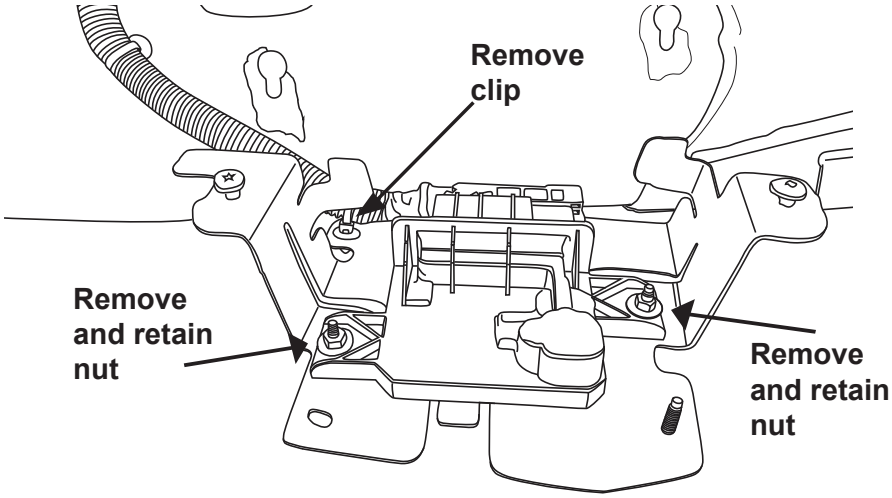

3

Assemble provided carriage bolts (21) and flange nuts (22) onto bracket as shown in image A. below. Next, as shown on image B., assemble the control box to provided harness relocation bracket, use nuts removed from previous step to attach the bracket.

Image A.

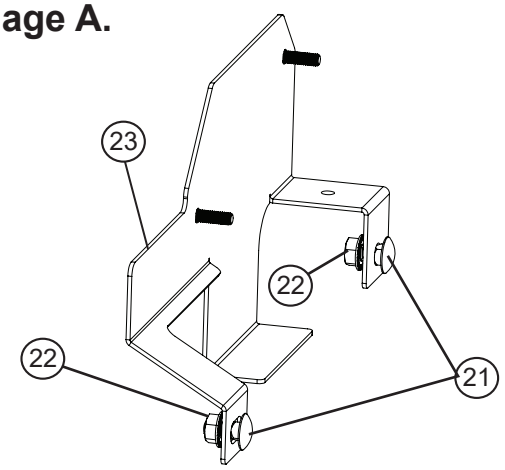

Image B.

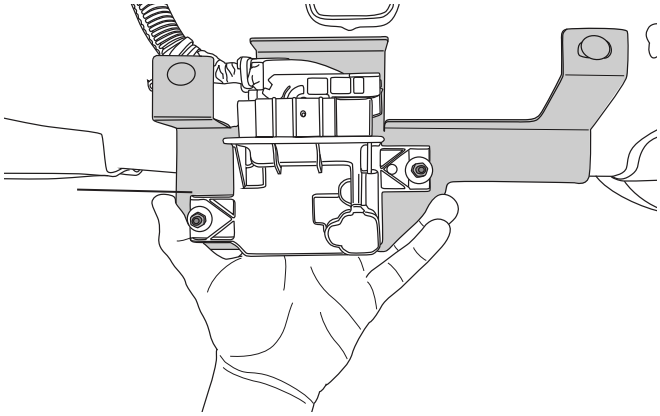

4

Slide bracket onto holes in frame and tighten flange nuts using a 9/16 socket or wrench.
Reinstall wire harness clip removed from vehicle body (see top arrow in image.
Install the other wire harness clip on to the new bracket (see second arrow to the right).

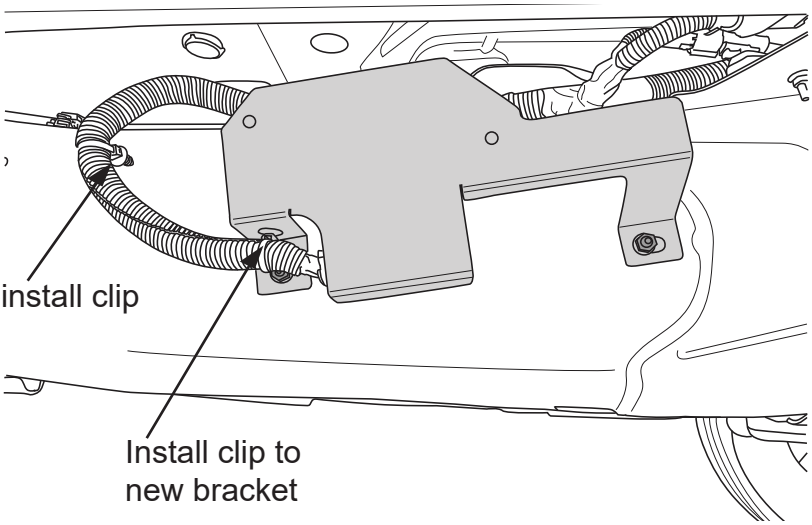

5

Install the front drive linkage (2) to the second mount position at the front of the vehicle. Use supplied Conical washer bolts (15) to attach linkage to body.
Use front passenger linkage (3) on passenger front side.

Note: Motor face towards rear of vehicle. If plastic or rubber plugs are present, remove them.

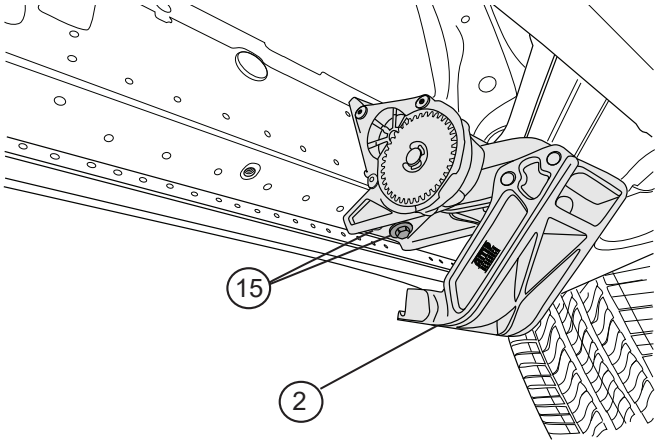

6

Install the rear drive linkage (4) to the second to last position from the rear of the vehicle. Use supplied Conical washer bolts (15) to attach linkage to body.
Repeat step on passenger rear side.

Note: If plastic or rubber plugs are present, remove them.

Torque fasteners to 16ft-lbs (22N m).

Note: Hand cycle linkage to verify clearance at bracket installed in step 5.

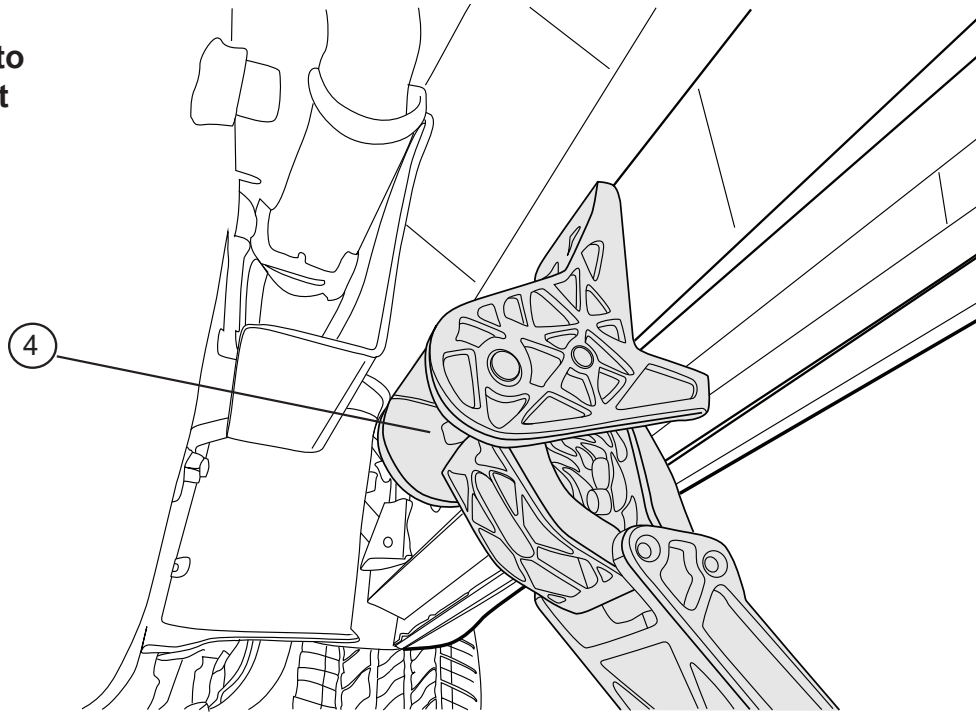

7

Slide the front mounting T-nut into position, place the board (1) about 2 inches from the front edge of the front door. Use fasteners(12) to attach boards, finger tighten only. Align the rear T-nut and bolt it to the rear linkage (4). Then tighten all 4 fasteners to 10 ft-lbs.

Driver Front Door

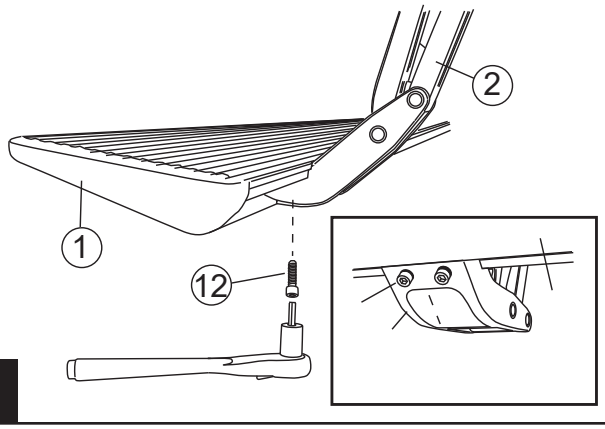

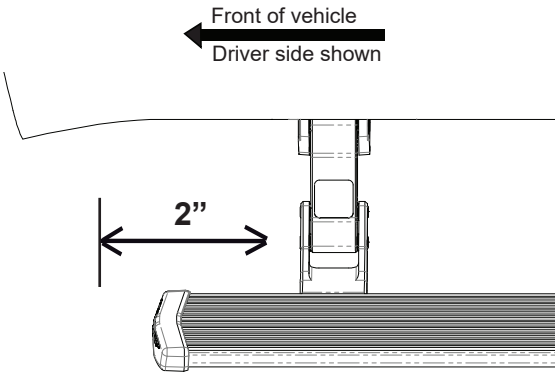

Torque to 10 ft.lbs.

8

Remove Negative terminal on battery to prevent a CEL when removing Connectors under dash in step 13. A loss of communication code may appear if battery is not disconnected.

Remove the cover on the battery top box and connect the red wire from the wire harness (5) to the battery terminal accessory stud use supplied M8 Nut (9).
Connect the Black wire to the stud on the body ground as shown below.

Plug in the main connectors to the controller (6), then attach the controller to the passenger side wire harness bundle on the outside of the battery. Secure with 11” zip ties (17).

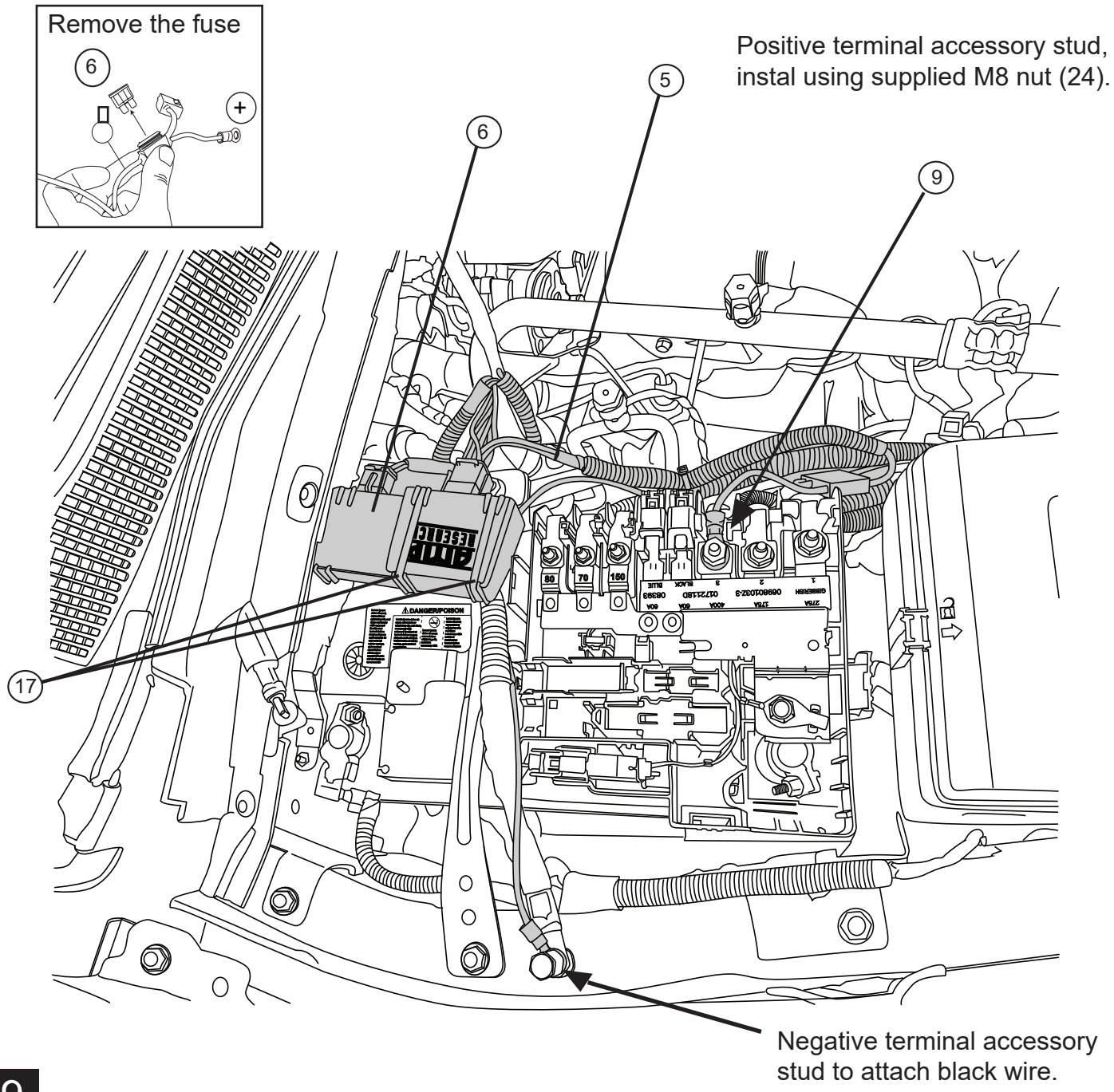

Route the long wire harness (5) leg across the truck under the edge of the cowl (zip tied thru the push rivet slots on the bottom), and then down to the outside of the frame away from the exhaust and steering, zip tie (16) it in place. The other leg shall go down immediately away from the exhaust and to the frame area.
Zip tie as needed.

Note: On dual battery vehicles and Diesel models, passenger side battery is still required.

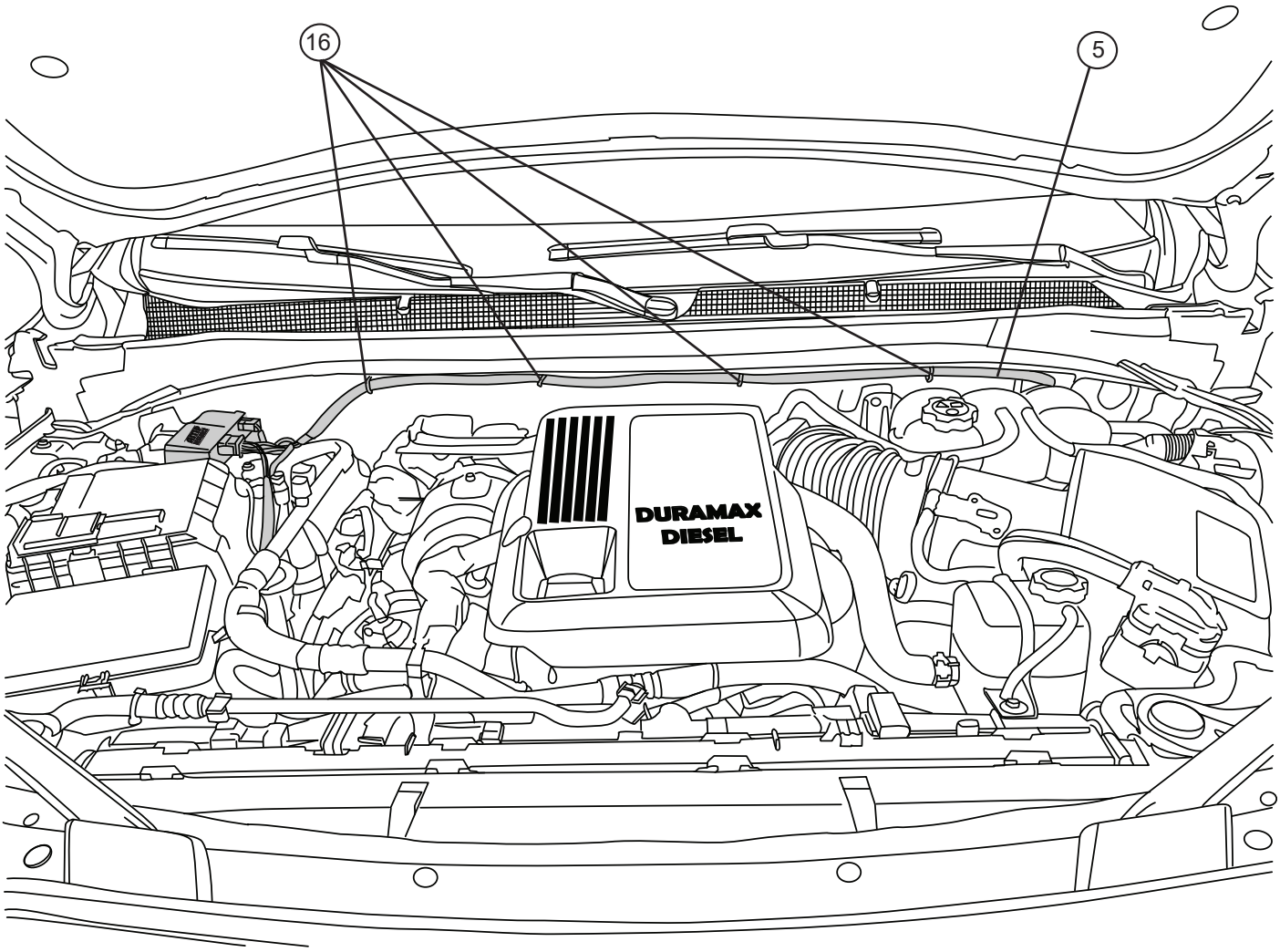

Remove the driver side door sill trim and kick panel carefully. Pull up the carpet and poke a small screwdriver through the rubber insulation material.

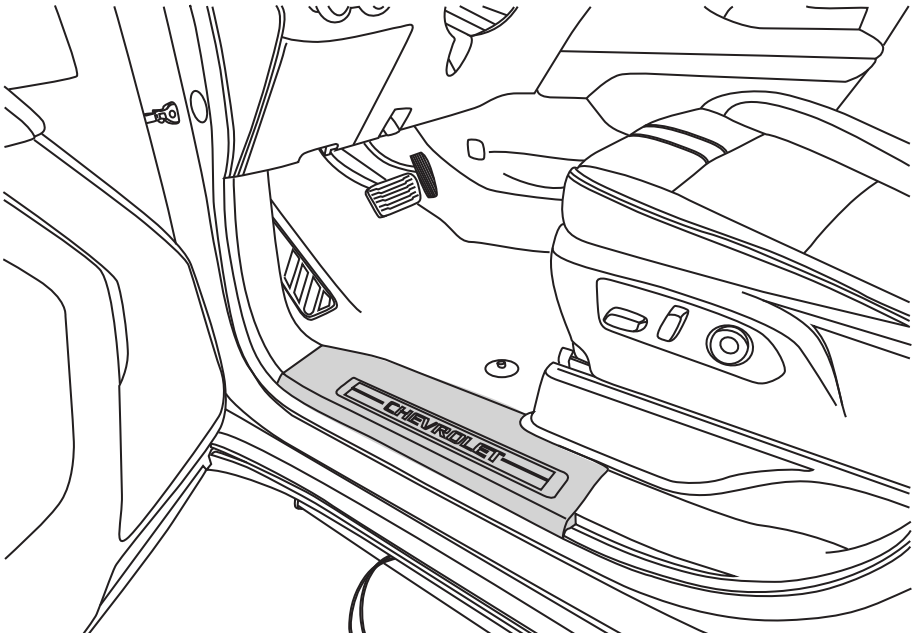

11

Lift carpet out of the way and use a 9/32” drill bit to drill thru the floor. Insert provided grommet (19) and pull trigger wires through hole. Route wires to kick panel area.

Reinstall door sill trim once completed.

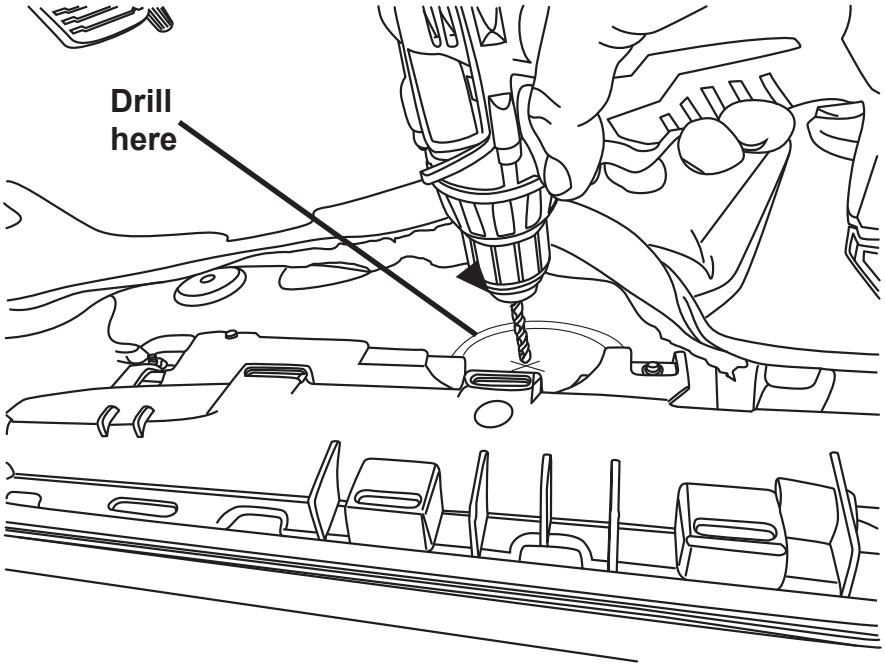

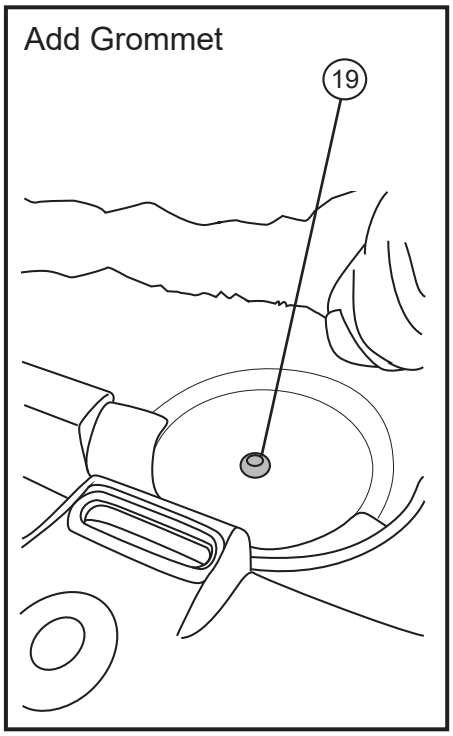

12

In driver side kick panel area, locate bank of 8 plugs. Locate the light grey connector and the light green connector.

a. On dark grey connector, locate the **Light Green/Grey stripe** wire located in pin location 29. Use supplied Posi-tap™ (14) and connect the blue wire from the OBD module.

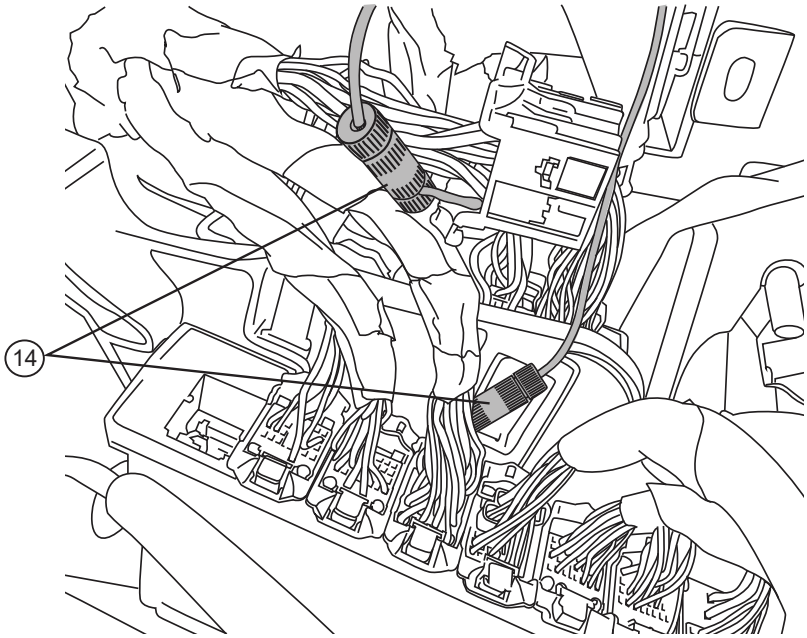

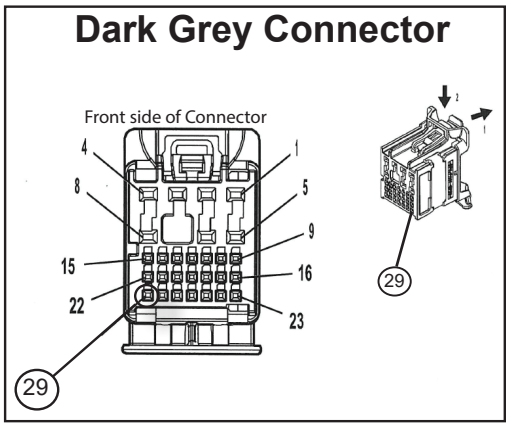

b. On light green connector, locate the **Green/Yellow stripe** wire located in pin location 19. Use supplied Posi-tap™ (14) connector and connect the white wire from the OBD module.

See next step for Posi-lock™ (13) install instructions.

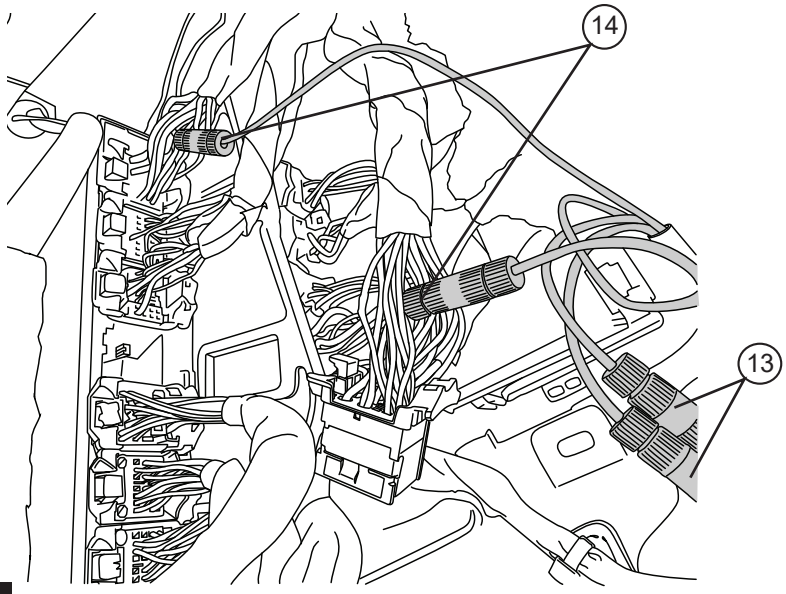

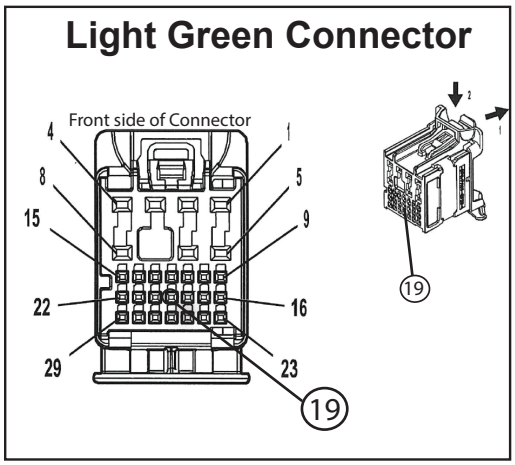

OBD II install: Use Supplied Posi-lock™ (13) connectors to attach the Plug and Play Module to the Harness. Attach matching colors on the harness to the wires on the module. Plug in module (7) to OBD II port on the vehicle. Secure harness with supplied tie wraps (16). ***Note: If the OBD II pass thru harness (76405-01A) was purchased see install sheet supplied in packaging. The pass through harness allows for an open port for other accessories. See below for images with brief descriptions.***

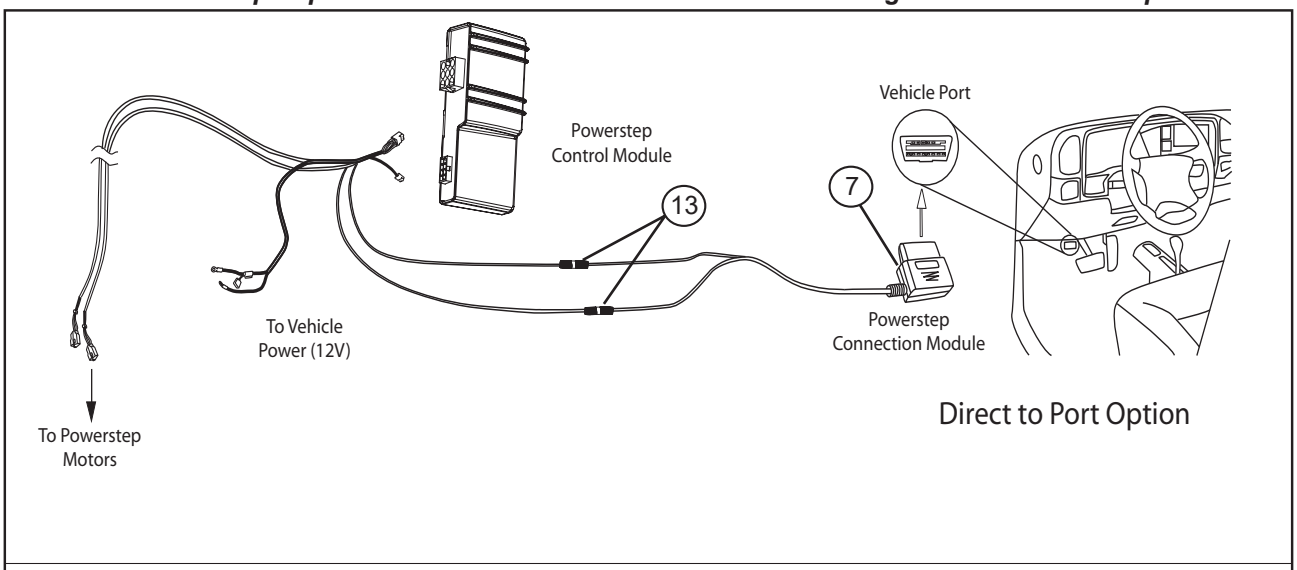

Direct to Port Option

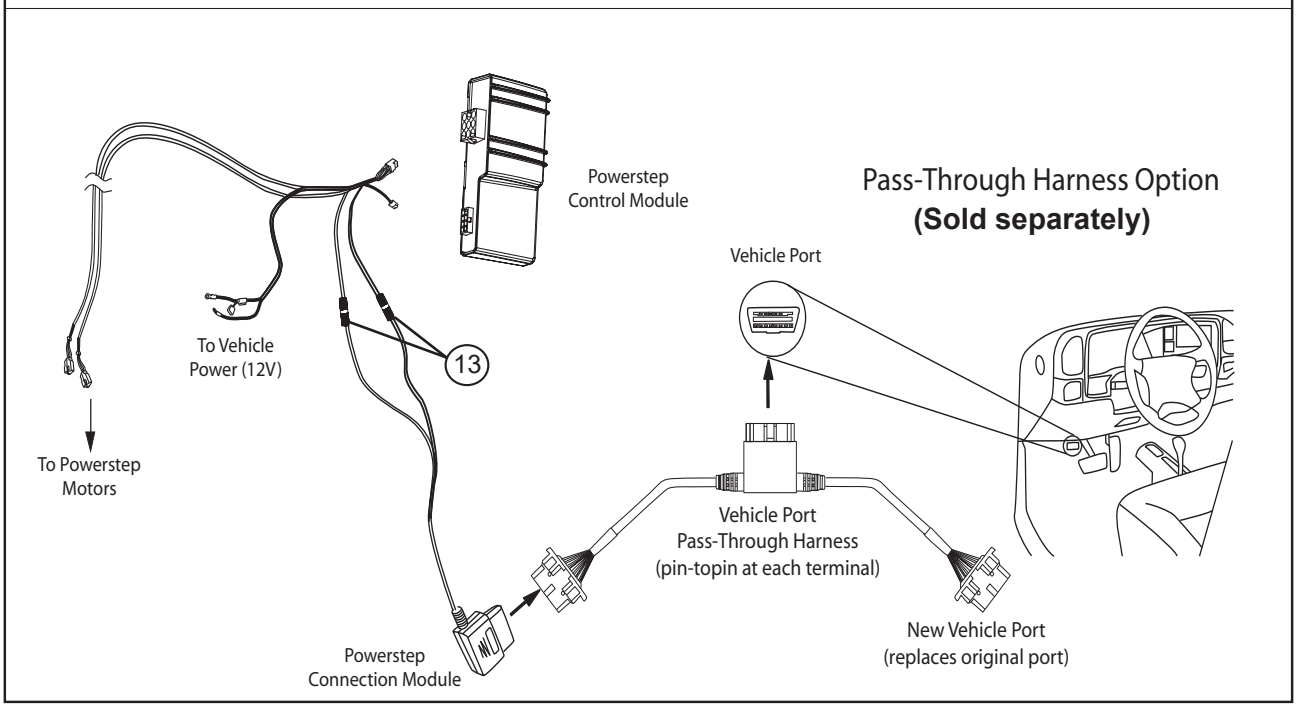

Pass-Through Harness Option
(Sold separately)

Plug in module to OBD port on the vehicle.

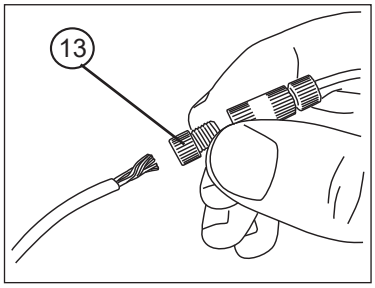

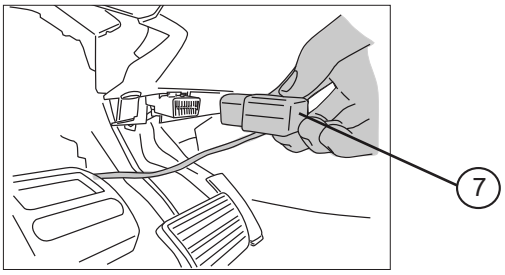

Install motor (8) onto drive linkage.
See page 2 for motor installation instructions..

Connect harness (5) to motor.

Secure harness with tie wraps (16).

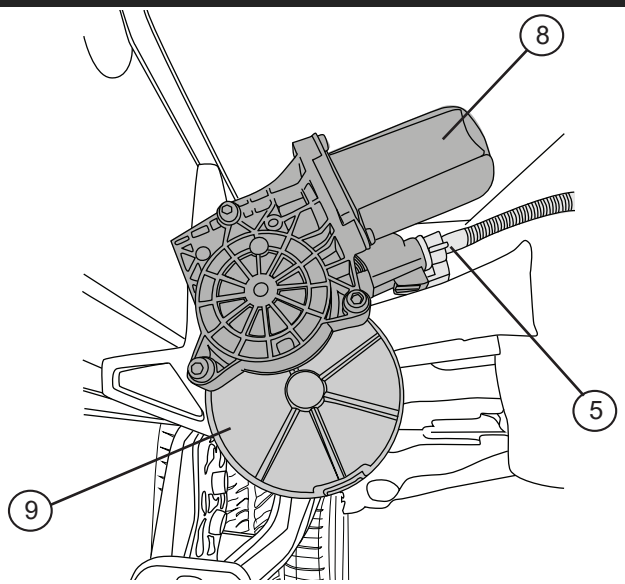

15

Using provided light brackets (11), stick LED lights (10) to brackets in orientation as shown.
Use provided Conical washer bolt (15) to attach bracket to threaded holes rearward of front linkage and forward of rear linkage.

Repeat on other side.

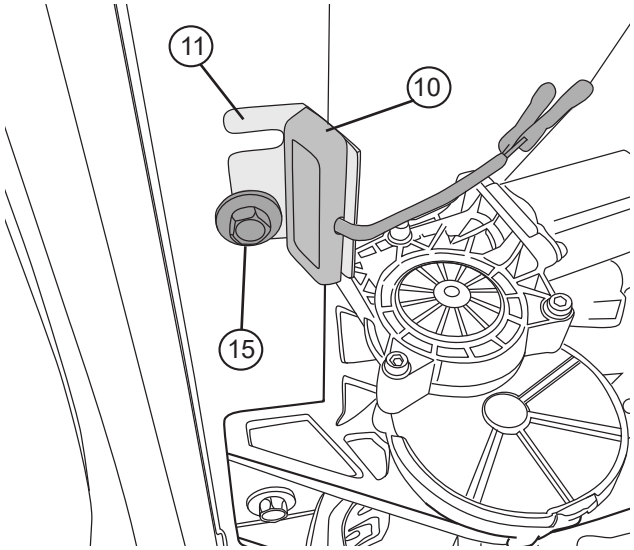

16

Using supplied butt connectors (18), connect the lamp wires, red to red, black to black. Once crimped, use heat gun to shrink tube. Close and wrap with conduit and electrical tape. Secure all loose wires with cable ties, with lamp wires pulled upward to avoid any wire snagging.
Repeat on other side.

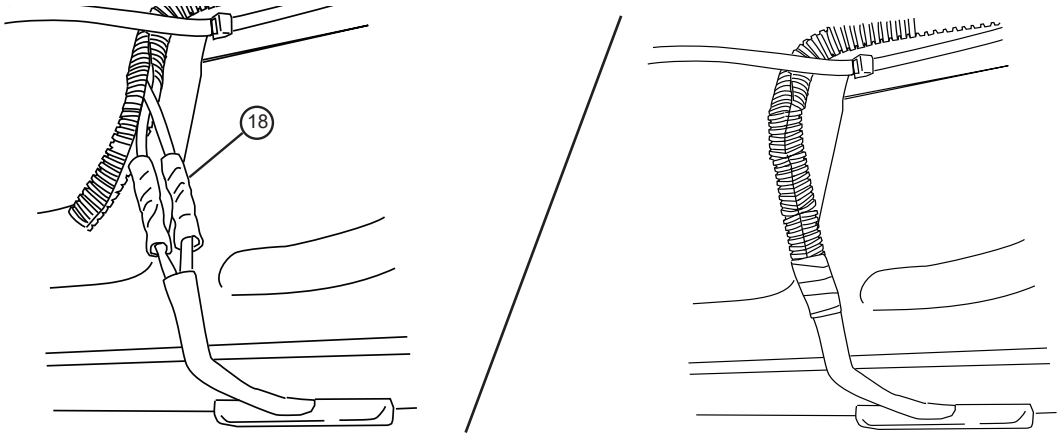

17

Reconnect Negative battery terminal. Check that all doors activate the Power Step and the LED Lights work when doors open and close. Reinstall any remaining trim panels.

Reinstall fuse.

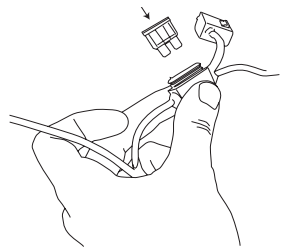

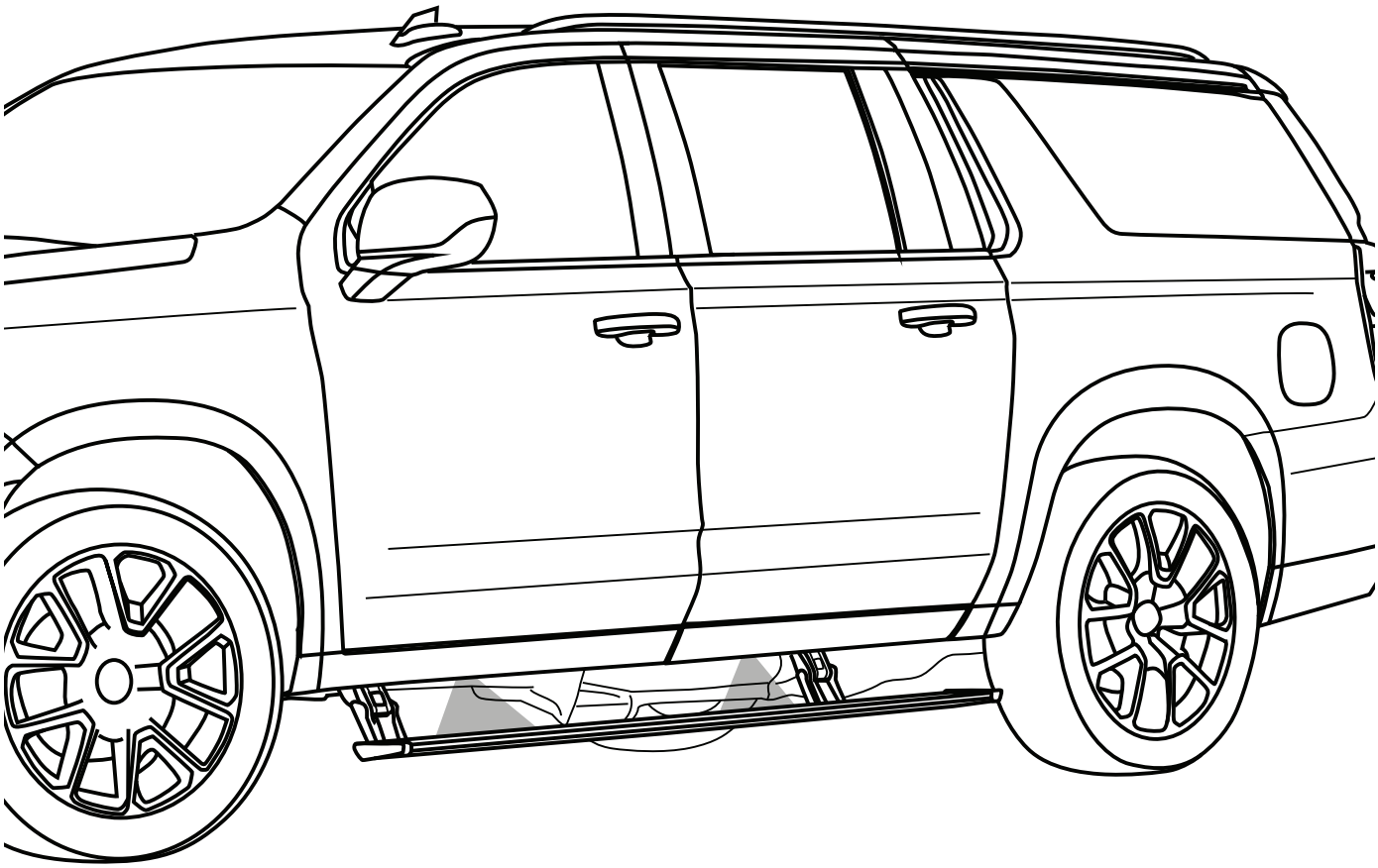

FINAL SYSTEM CHECK

Check that all doors activate the PowerStep and the LED lights work when doors open and close.

NORMAL OPERATION: When the doors open, PowerStep automatically deploys from under the vehicle. When the doors are closed, PowerStep will automatically return to the stowed/retracted position. ***Note that there is a 2-second delay before the PowerStep returns to the stowed/retracted position.***

CORRECT OPERATION OF LIGHTS: All four lamps will illuminate upon opening any door of vehicle. Lamps will stay on until restowing of both Power Steps or until 5 minutes has expired with the doors open. When the lights timeout after 5 minutes, they can be reillumintated by closing and opening any door of vehicle.

AMERICAN DESIGNED & ENGINEERED

Thank you for your recent RealTruck purchase.

REGISTER YOUR PRODUCT TODAY FOR FASTER SERVICE & PRODUCT UPDATES

Please visit:
https://realtruck.com/warranty-registration/
or scan the QR Code

SCAN ME

Product Registration Benefits:

• Ensure we have your purchase receipt and product info in our system which is required for warranty.

• Faster and easier access to customer service and tech support in the unlikely event you need warranty or product support.

• Registration helps us keep you up to date on product information and offers.

To view other RealTruck products that may be offered for your vehicle.

Please visit: www.realtruck.com

Rev 05.30.24

REALTRUCK AMP RESEARCH Power Step

Congratulations on your purchase of the genuine RealTruck / AMP Research PowerStep!
Here's what you should know...

POWER-DEPLOYABLE RUNNING BOARDS OPERATION: RealTruck / AMP Research PowerStep running boards automatically move when the doors are opened to assist entering and exiting the vehicle.

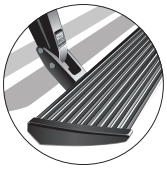

Automatic power deploy:
The running boards will extend down and out when the doors are opened.

Automatic power stow:
The running boards will return to the stowed position when the doors are closed. There will be a 2-second delay before the running boards move to the stowed position.

Automatic stop:
If an object is in the way of the moving running board, the running board will automatically stop. To reset, clear any obstruction, then simply open and close the door to resume normal operation.

Manually set in the deployed (OUT) position for access to the roof:
The running boards can be manually set in the deployed position by firmly holding the step down with your foot while at the same time closing the door. To resume normal operation, open and close the door.

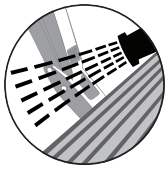

Maintenance: In adverse conditions, debris such as mud, dirt, and salt may become trapped in the running board mechanism, possibly leading to unwanted noise. If this occurs, manually set the running boards to the deployed position and flush the front and rear hinge arms with a high-pressure car wash wand. Avoid spraying the motors directly. After washing, apply silicone spray lubricant to the hinge pivot pins. Do not apply silicone, wax or protectants like Armor All® to the running board stepping surface.

Caution! Keep hands away when the running board is in motion.

5-YEAR LIMITED WARRANTY

RealTruck / AMP RESEARCH warrants this product to be free from defects in material and workmanship for FIVE (5) YEARS FROM DATE OF PURCHASE, provided there has been normal use and proper maintenance. This warranty applies to the original purchaser only. All remedies under this warranty are limited to the repair replacement of the product itself, or the repair or replacement of any component part thereof, found by the factory to be defective within the time period specified. The decision to repair or replace is wholly within the discretion of the manufacturer.

This warranty specifically excludes labor. If you have a warranty claim, first you must call our factory at the number below for instructions. You must retain proof of purchase and submit a copy with any items returned for warranty work. Upon completion of warranty work, if any, we will return the repaired or replaced item or items to you freight prepaid. Damage to our products caused by accidents, fire, vandalism, negligence, misinstallation, misuse, acts by nature or by defective parts not manufactured by us, is not covered under this warranty.

ANY IMPLIED WARRANTIES OF MERCHANTABILITY AND/OR FITNESS FOR A PARTICULAR PURPOSE CREATED HEREBY ARE LIMITED IN DURATION TO THE SAME DURATION AND SCOPE AS THE EXPRESS WRITTEN WARRANTY. OUR COMPANY SHALL NOT BE LIABLE FOR ANY INCIDENTAL OR CONSEQUENTIAL DAMAGE.

Some states do not allow limitations on how long an implied warranty lasts, or the exclusion or limitation of incidental or consequential damages, so the above limitations or exclusions may not apply to you. This warranty gives you specific legal rights, and you may also have other rights that vary from state to state.

FOR WARRANTY ISSUES WITH THIS PRODUCT PLEASE CALL REALTRUCK TECH SUPPORT 1-888-983-2204

WARNING

Be sure to read and precisely follow the provided instructions when installing this product. Failure to do so could place the vehicle occupants in a potentially dangerous situation. After installing or reinstalling, re-check to insure that the product is properly installed.

The material that your product is made from can be recycled. Please also consider recycling the packaging that your product came in.