Power Step

APPLICATION	MODEL YR	PART #
Sprinter Van (2 - sided) ***Not compatible with Cold Weather Package***	2019 - 2024	76264-01A

INSTALLATION GUIDE

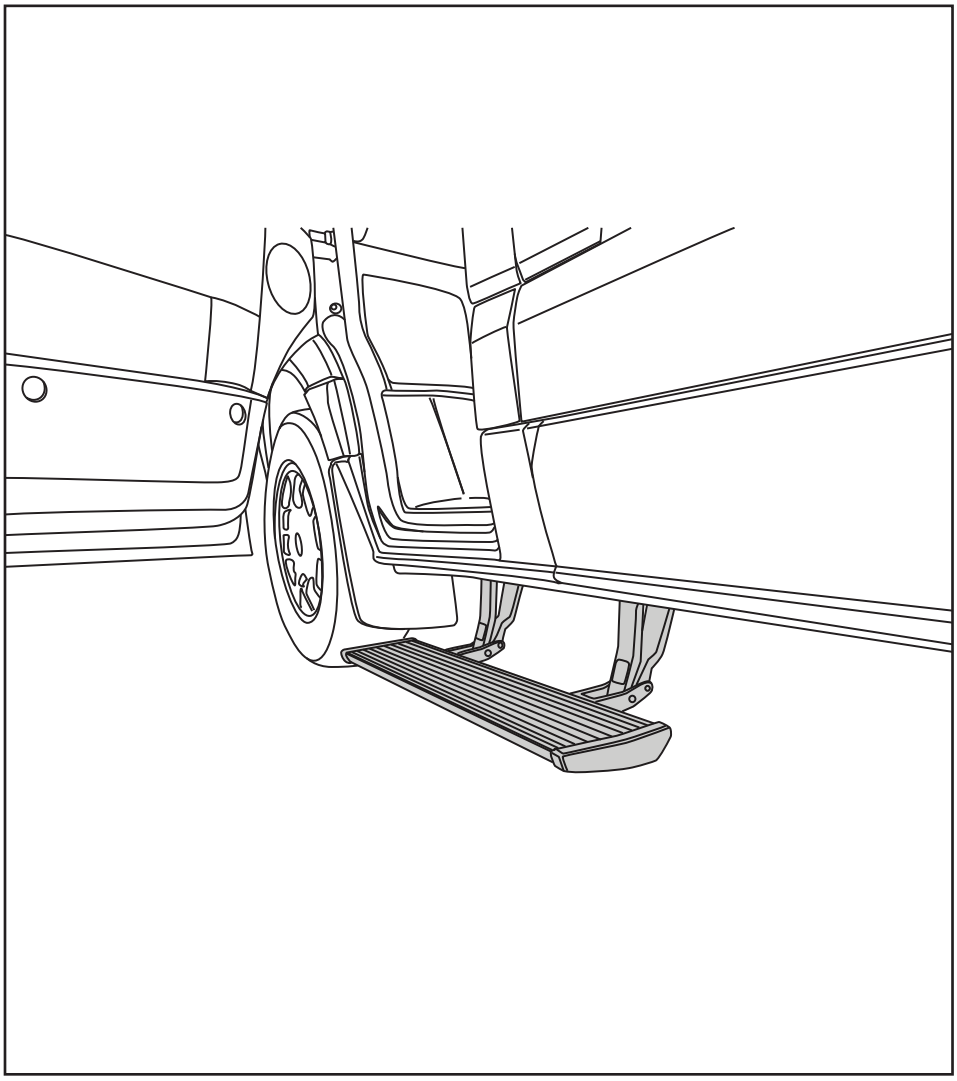

INSTALLATION TIME

3-5 Hours

Professional installation recommended

SKILL LEVEL

1 2 3 4

4= Experienced

TOOLS REQUIRED

- ❑ Safety goggles
- ❑ Measuring tape
- ❑ 13mm wrench
- ❑ 19mm wrench
- ❑ 13mm socket
- ❑ 10mm socket
- ❑ Ratchet wrench and extension
- ❑ Wire stripper / cutter
- ❑ 3/16” hex key (allen wrench)
- ❑ 4mm hex key (allen wrench)
- ❑ Electrical tape
- ❑ T25 Torx Driver
- ❑ Cordless Drill
- ❑ 1/8” Drill Bit
- ❑ 7/32” Drill Bit
- ❑ 9/32” Drill Bit
- ❑ Heat Gun

WARRANTY

5-Year Limited Warranty

REALTRUCK TECH SUPPORT 1-888-983-2204 (Press 2) Monday - Friday, 8:00 AM - 5:00 PM EST

Designed and manufactured by RealTruck AMP Research® • Made in Mexico
Patent Protected. Please see our product site for applicable patents. www.realtruck.com/b/amp-research/
© RealTruck Group, Inc., 2026 • Five-year limited warranty. • Professional installation is recommended.

INSTALLATION GUIDE
Attaching motor to linkage assembly

The motors must be attached to the linkage assemblies before continuing the installation process.

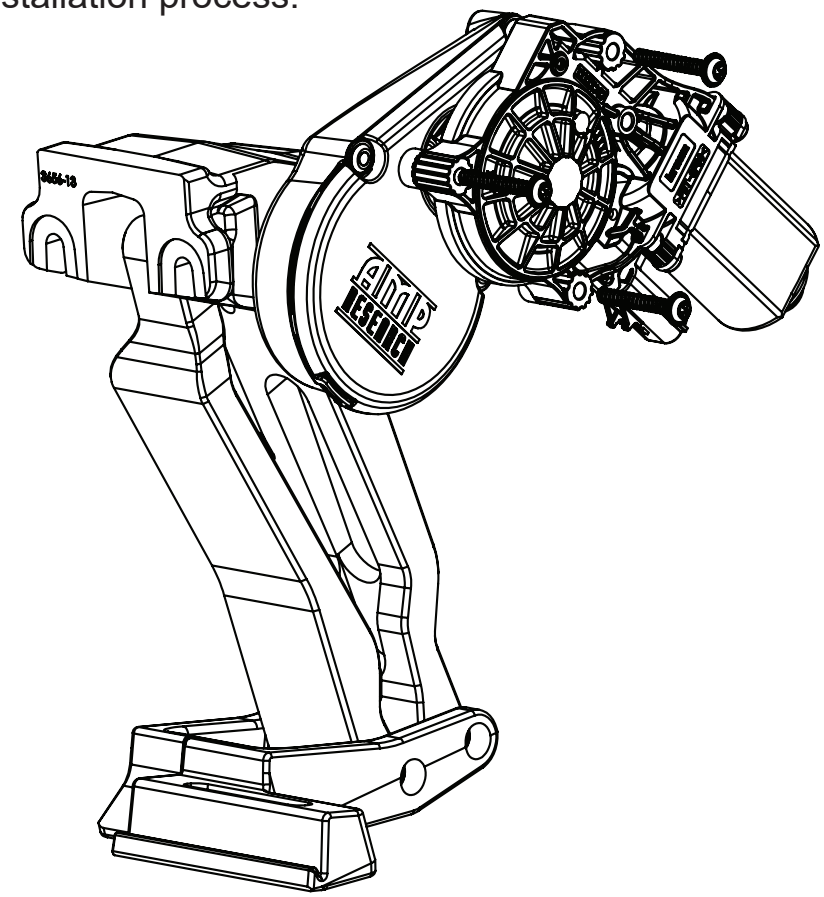

EXPLODED VIEW

- Motor
- Socket cap screw
- Washer
- Drive Gear Housing Cover

CAUTION: HANDLE WITH CARE.

To ensure our customers receive all components with full integrity, we pack the motors separate from their linkage assemblies. This requires that the installer position and fasten the motor before continuing with the install. Please follow the instructions below and handle the assembly carefully.

CAUTION: Dropping the assembly or any excessive impact MAY cause damage to the motor.

Instructions:

1. Position the gear cover in place as shown if not already in place.

2. Seat motor into position on the three mounting bosses. This may require an adjustment of the gear by moving the swing arms.

3. After seating into place, fasten the motor with the three motor mount screws with 4mm Hex Head. Tighten screws to 36 in-lbs (4N-m). **Do not over torque.**

PARTS LIST AND HARDWARE IDENTIFICATION

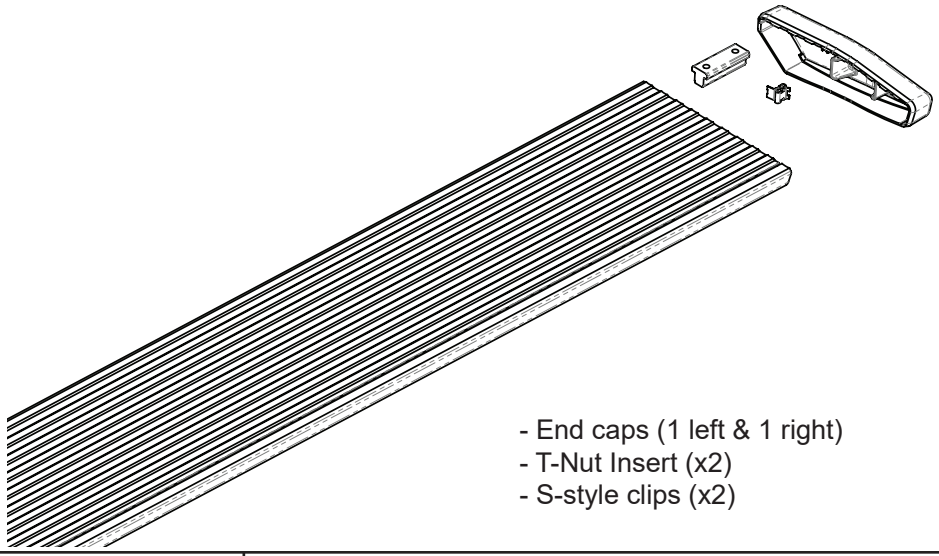

1

Running Board Assembly

1 - 36” Board for Driver side

1 - 79” Board for Passenger side

- End caps (1 left & 1 right)
- T-Nut Insert (x2)
- S-style clips (x2)

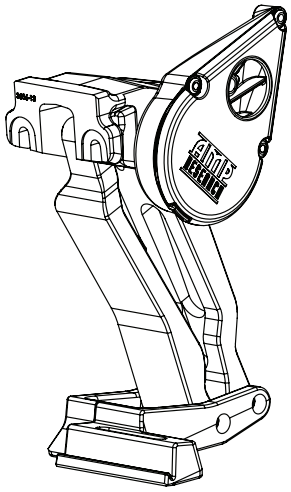

2a

Motor Linkage Assembly (Passenger)

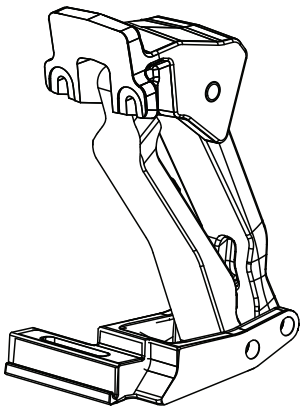

3a

Idler Linkage Assembly (Passenger)

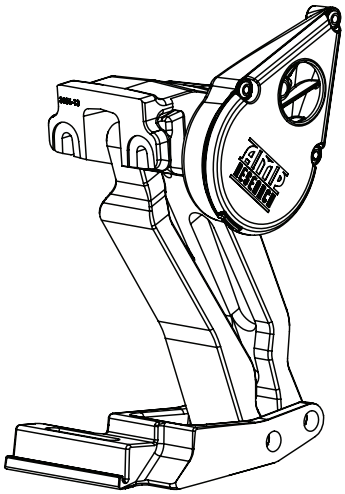

2b

Motor Linkage Assembly (Driver)

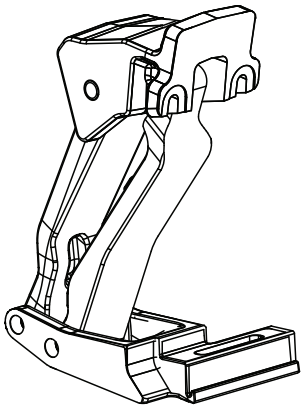

3b

Idler Linkage Assembly (Driver)

PARTS LIST AND HARDWARE IDENTIFICATION

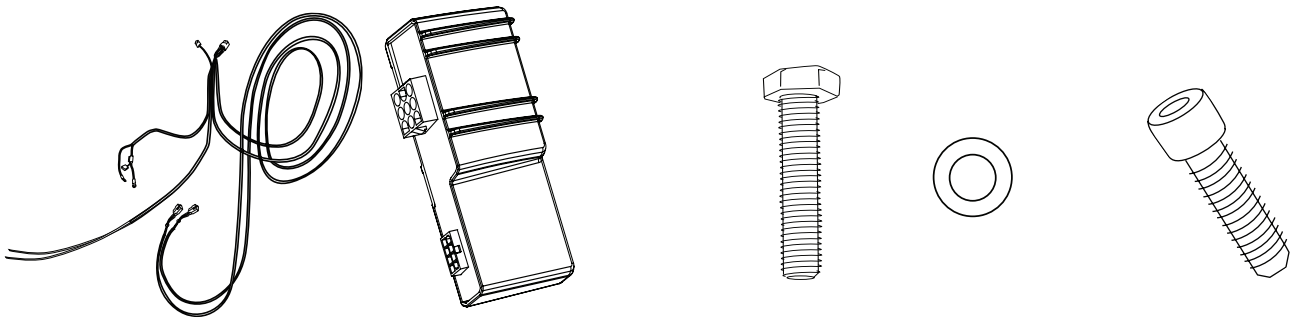

4 Wire Harness

5 Controller STA

6 x7 M8 Hex bolt

7 x8 Washer (SS)

8 x8 Socket Cap Screw

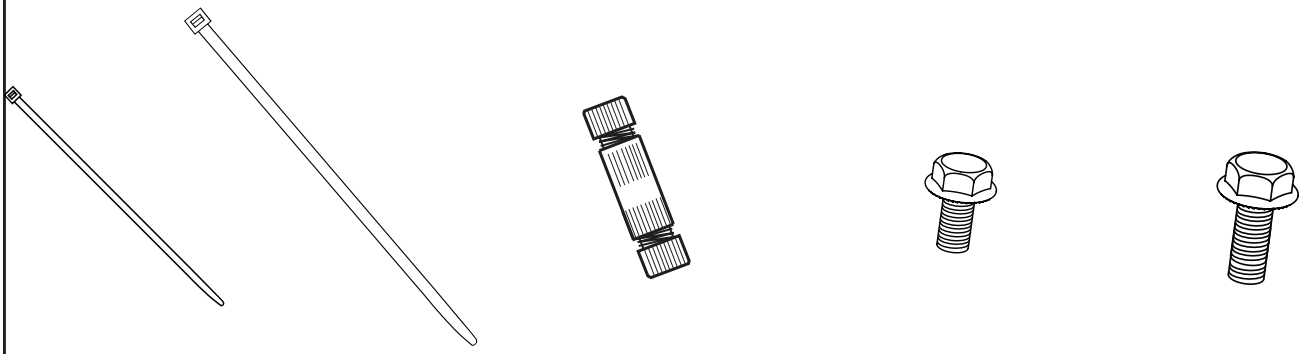

9 x20 Cable Tie (7”)

10 x2 Cable Tie (11”)

11 x2 Posi-Lock®

12 x8 M8x12 Flange Bolt

13 x4 M8x25 Flange Bolt

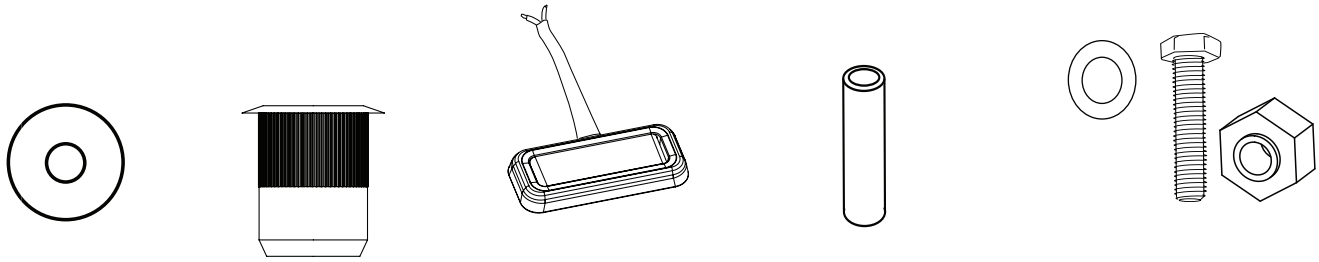

14 x4 Large Washer

15 x12 M8 Rivet Nut

16 x4 LED Lamp

17 x8 Butt Connector

18 Rivet Nut Tool

PARTS LIST AND HARDWARE IDENTIFICATION

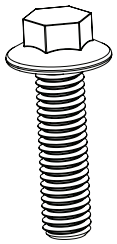

19 M8 small head Hex bolt

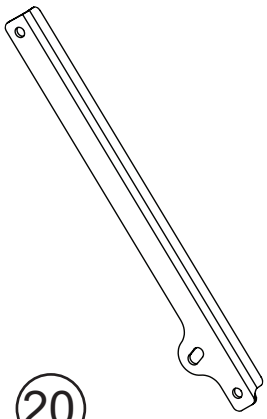

20 Rear Support Bracket (Passenger rear)

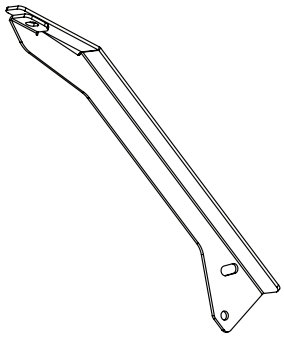

21 x2 Support Bracket (Driver rear and Passenger front)

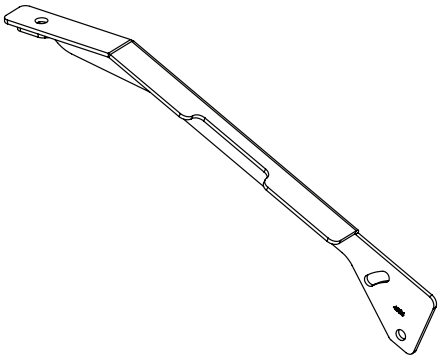

22 Bracket (Driver Front)

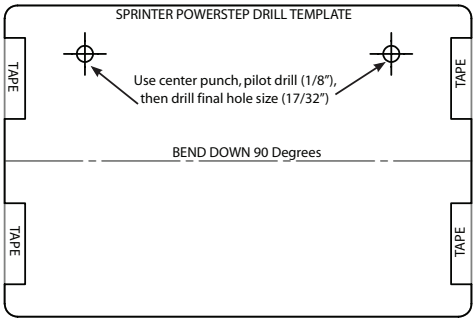

23 x2 Drill Template

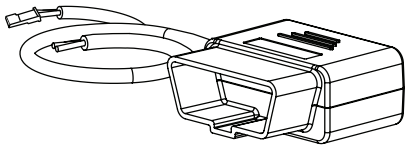

24 OBD II Plug

25 x4 Grommet

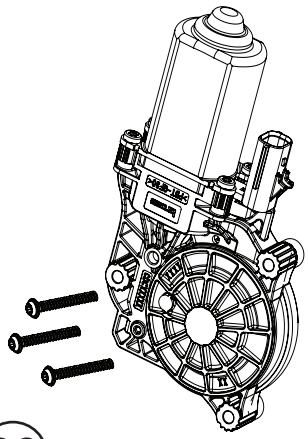

26 x2 Motor kit

Passenger Side

Rear Drive Linkage install: Locate rear linkage location. Clean undercoating so any proud edges are knocked off and mounting surface is flat.

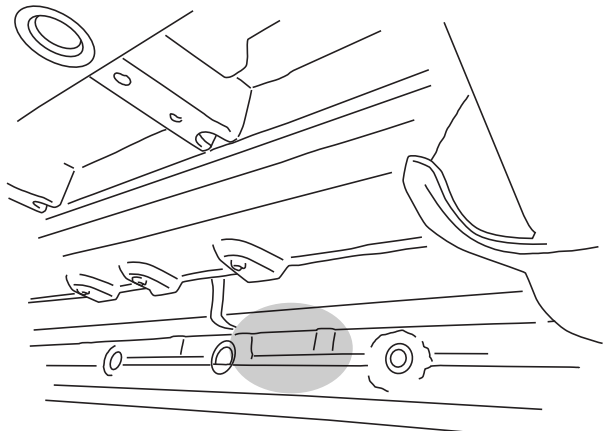

1

Set Upper mount (2a) up to bump in sheetmetal and mark side of linkage near mounting slot.

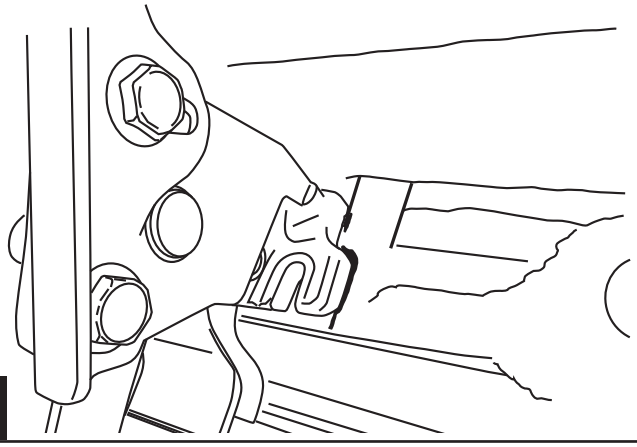

2

Set template (23) up to marked line. Center punch holes.

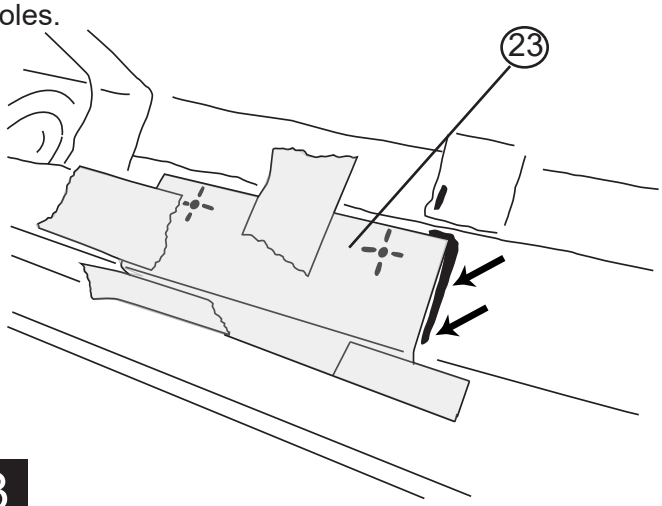

3

Pre Drill holes with an 1/8” Drill and then drill to 17/32”. **Then insert rivet nuts (15) into position. Refer to install card in rivet nut tool (18) bag.** Then pre-thread M8 screws (6) and washers (7) into position.

Warning: Rivet nuts not properly collapsed will not hold securely to sheet metal.

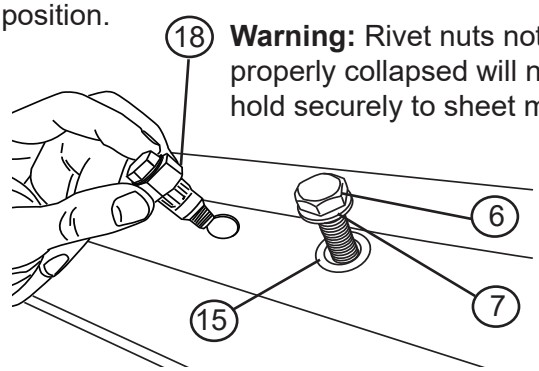

4

Using supplied Flange bolts install bracket onto Drive linkage Upper mount (2a). Do not tighten to allow for adjustment. Use shorter bolts to prevent bolt and linkage arm interference.

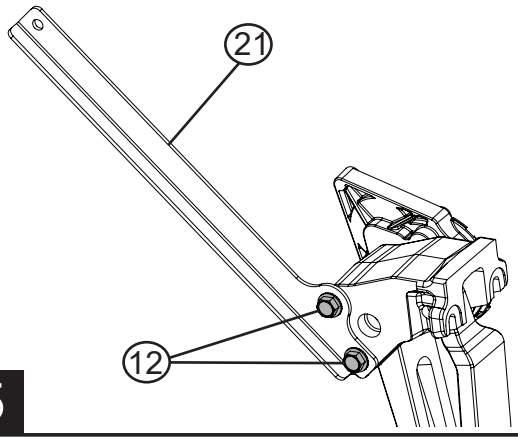

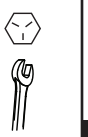

5

Set rear Drive linkage (2a) over bolts (6 & 7). Using a 13mm box wrench snug up two bolts on linkage.

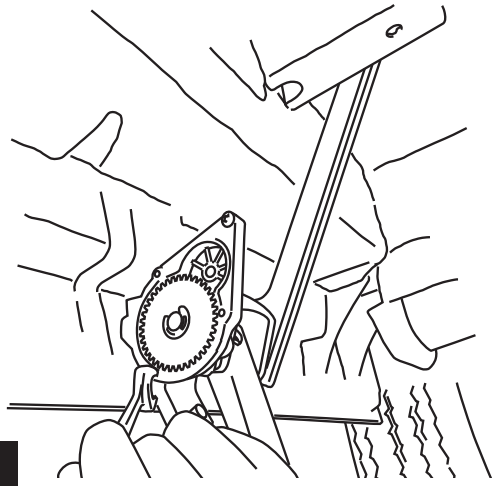

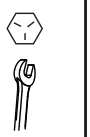

6

Front Idler Linkage Install: Locate front linkage mounting position. Location is approx 11” forward of tab in unibody crossmember as show. Tape template (23) in place and center punch holes.

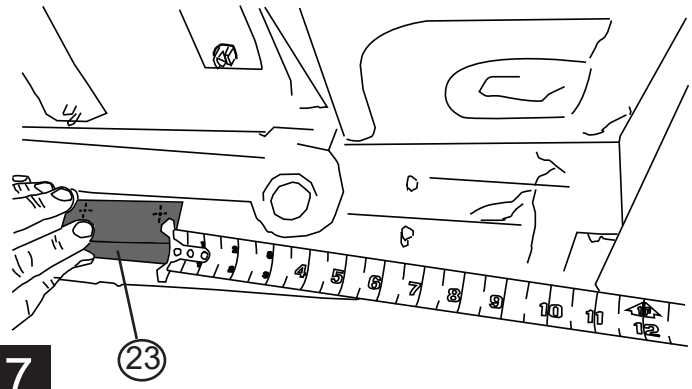

7

Pre Drill holes with an 1/8” Drill and then drill to 17/32”. **Then insert rivet nuts (15) into position. Refer to install card in rivet nut tool (18) bag.** Then pre-thread M8 screws (6) and washers (7) into position.

Warning: Rivet nuts not properly collapsed will not hold securely to sheet metal.

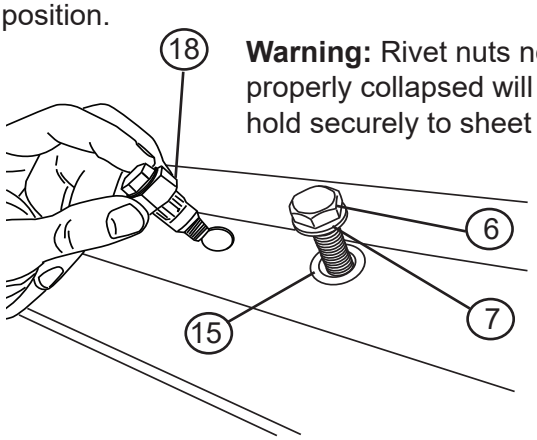

8

Using supplied Flange bolts (12) install bracket (20) onto Idler linkage Upper mount (3a). Do not tighten to allow for adjustment. Use shorter bolts to prevent bolt and linkage arm interference.

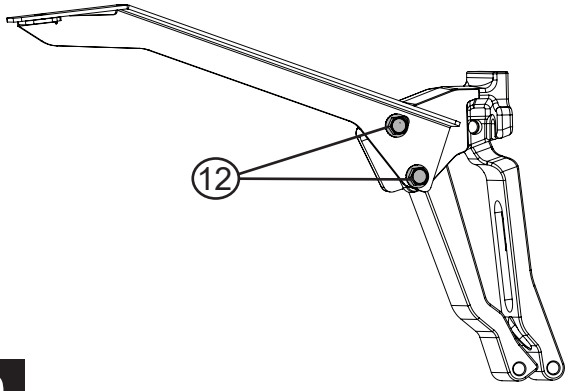

9

Set front idler linkage (3a) over bolts (6 & 7). Using a 13mm box wrench snug up two bolts on linkage.

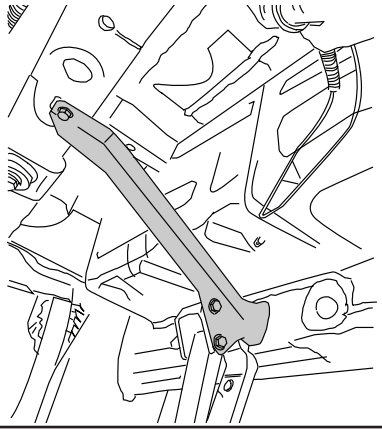

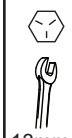

10

Driver Side

Locate Driver side front linkage location. Clean undercoating off so any proud edges are knocked off and mounting surface is flat. Front idler linkage location is approx. 10” Forward of unibody cross member. Tape template in place and center punch holes.

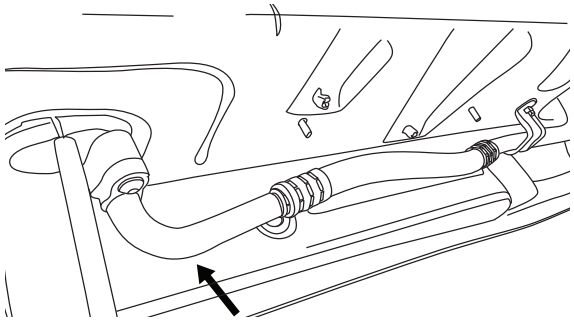

Rear AC (Not on every vehicle. On vehicles that have AC line, gently shift line to add clearance at upper mount.)

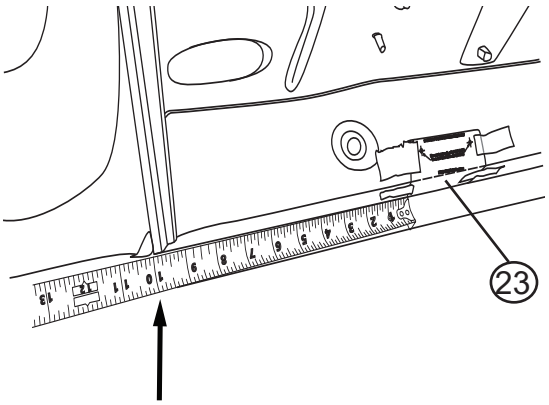

11

Pre Drill holes with an 1/8” Drill and then drill to 17/32”. **Then insert rivet nuts (15) into position. Refer to install card in rivet nut tool (18) bag.** Then pre-thread M8 screws (6) and washers (7) into position.

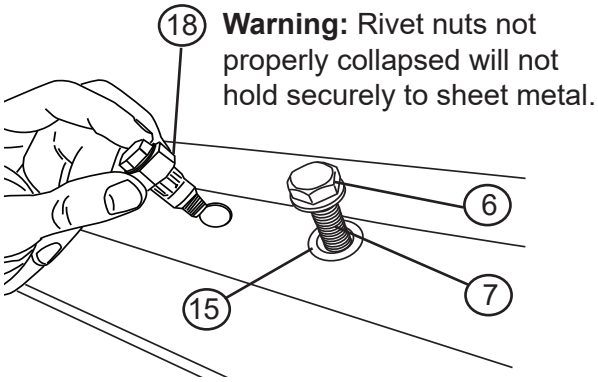

Warning: Rivet nuts not properly collapsed will not hold securely to sheet metal.

12

Locate Driver side rear Drive linkage location. Clean undercoating off so any proud edges are knocked off and mounting surface is flat. Rear drive linkage location is approx. 2” Rearward of unibody cross member. Tape template (23) in place and center punch holes. Drill and insert rivet nuts (15).

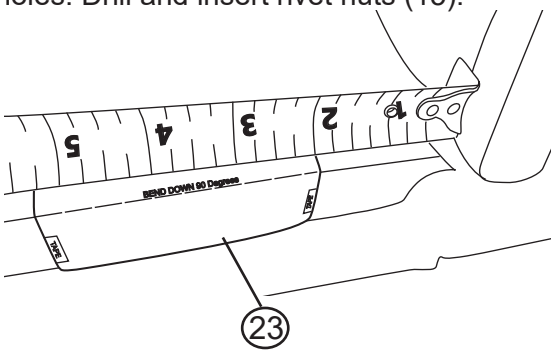

13

Install running board onto lower mounts, measure 3” from end of board to side of linkage as shown below.

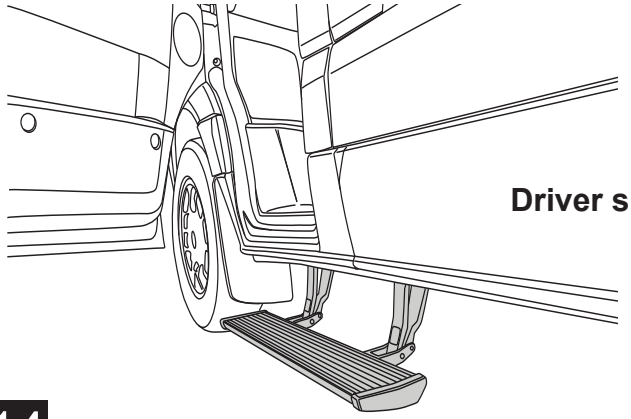

Driver side

Passenger side

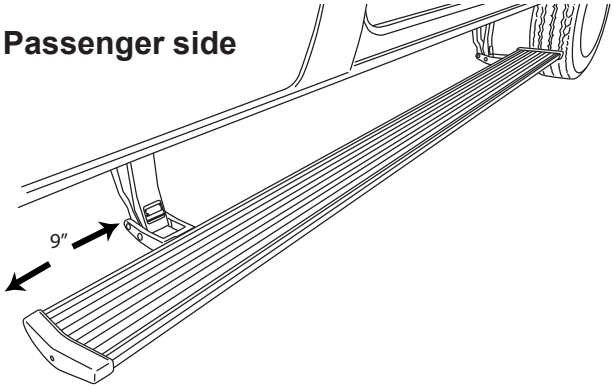

Install Running board onto lower mounts. Measure 9 inches from end of board to side of linkage as shown below.

14

Using light pressure pull out from the inside edge of the running board to get the step in the level position. Hold the running board in position. Mark upper hole location in rear brackets.

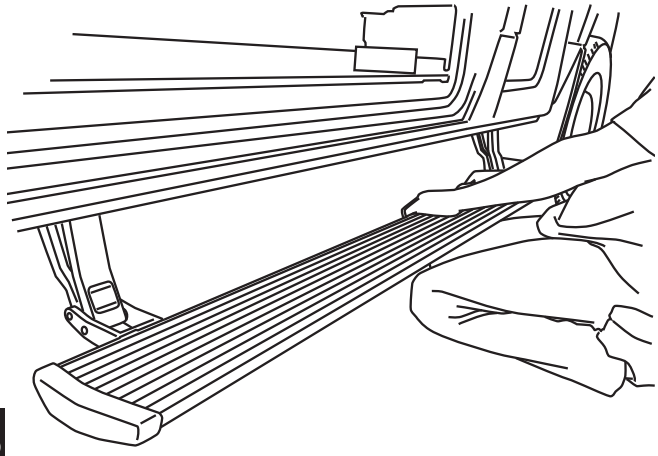

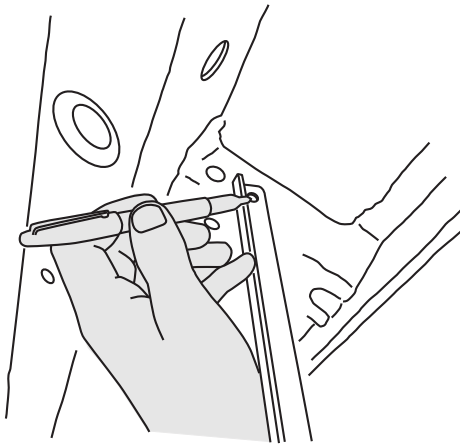

15

Remove bracket bolts on side of upper mount to rotate out of way. Center punch, Pre drill with 1/8" and then final drill to 17/32". Install rivet nut. Install longer flange bolt and reassemble bolts on bracket at linkage.

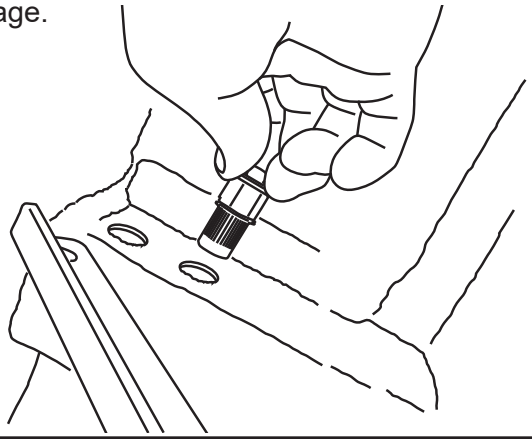

16

With front bracket in place mark hole. Center punch, Pre drill with 1/8" and then final drill to 17/32". Install rivet nut. Install longer flange bolt and reassemble bolts on bracket at linkage. **Note: 2 Washers are provided to space out multiple layers of sheetmetal.**

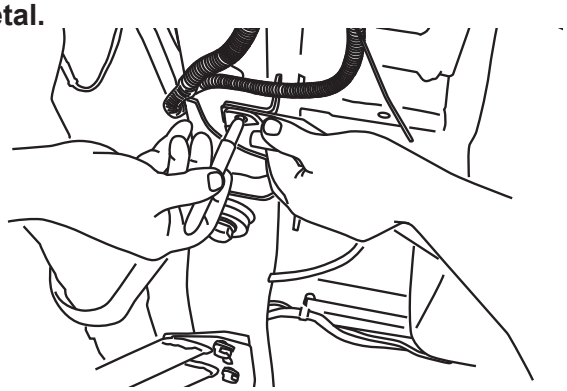

17

Install bracket into position and tighten using 13mm socket or wrench. Once brackets are installed attach motor to rear linkage. See page 2 for motor installation.

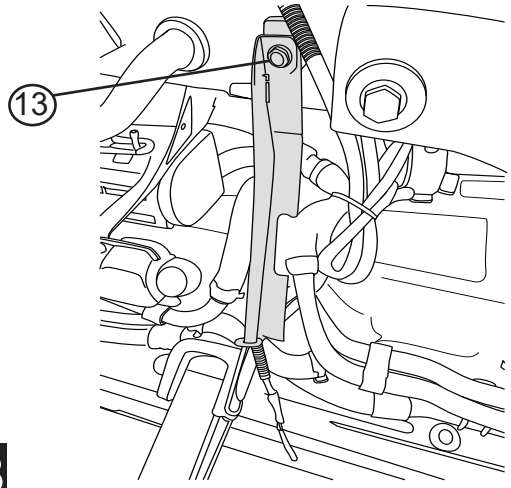

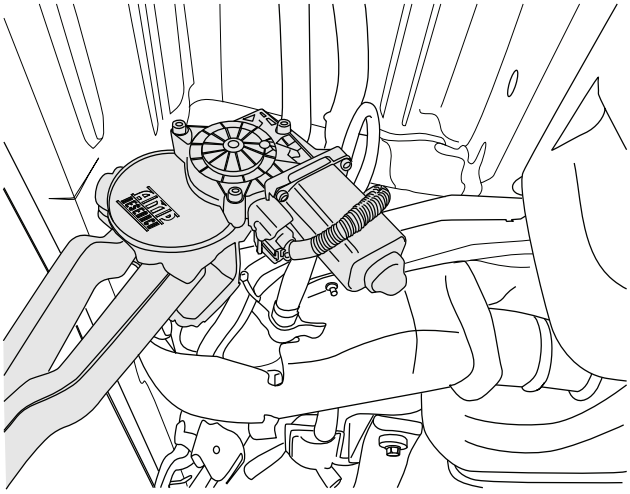

18

Remove Fuse from harness. Next, connect Positive terminal on power lead using a 10mm socket. Connect ground to body ground in bottom of seat box. Run trigger wires end up through the large rubber boot. Zip tie around the boot may need to be removed to route wire through. If so use one supplied zip ties (9) and re-seal boot.

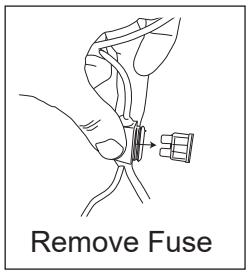
Remove Fuse

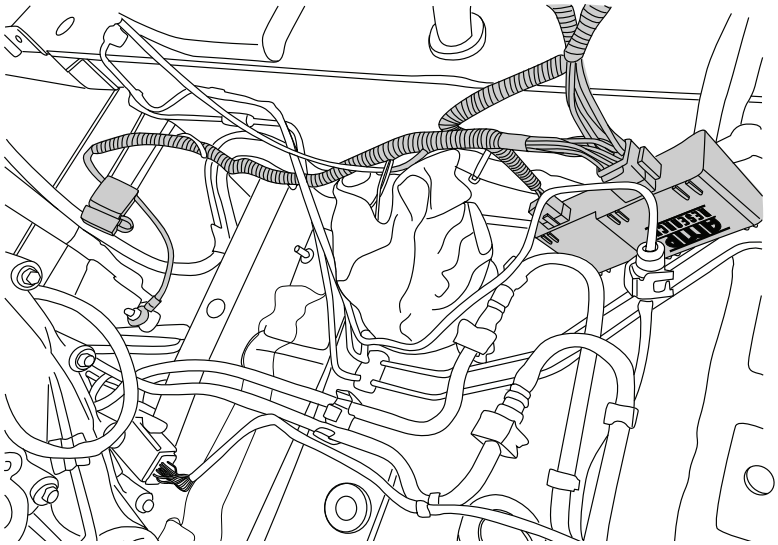

19

Remove Drivers seat box cover. Be careful not to damage Air Bag wire that runs across cover.

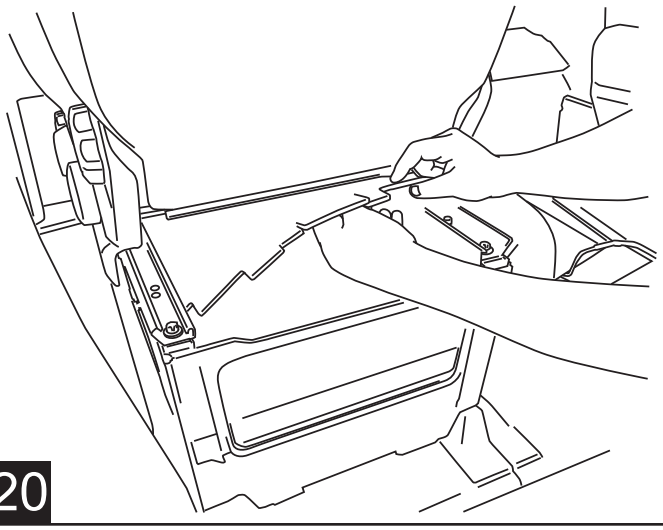

20

Remove all sill plate covers to route trigger wires under dash.

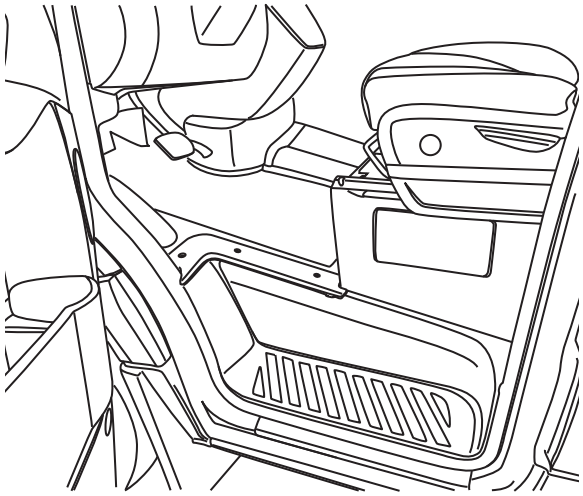

21

Route Trigger wires (Solid Purple and Purple / Black Stripe) under seat and out under sill plate cover.

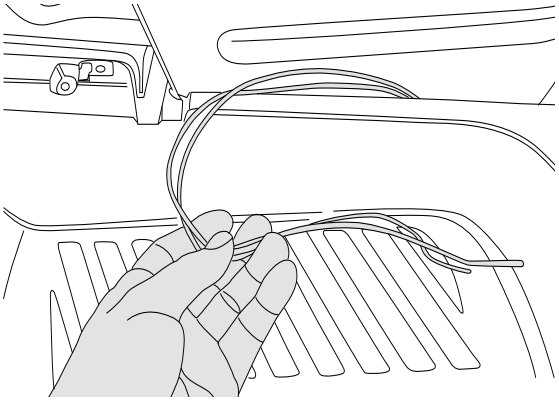

22

Route 2 wires up towards driver side kick panel.

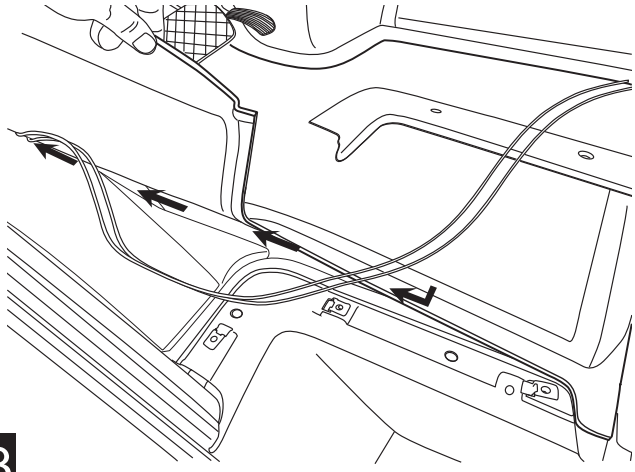

23

Using supplied Posi-Lock® connectors (11) connect matching wire colors together. Purple and Purple w/Black Stripe wires (see next page for further instructions).

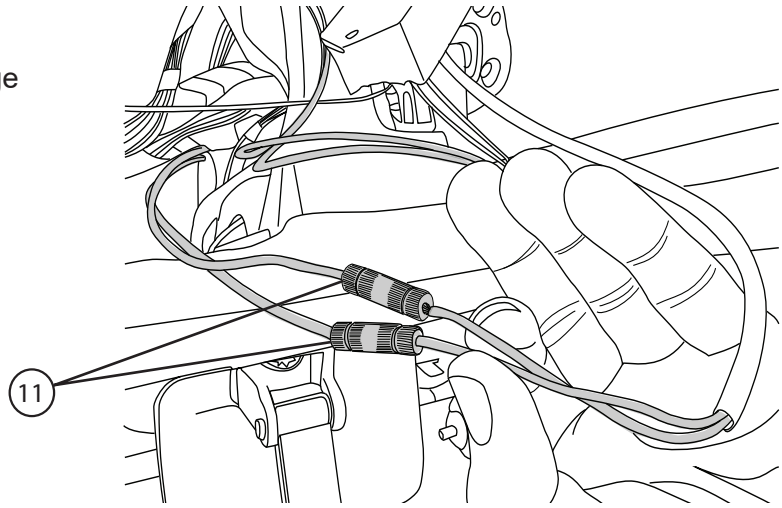

24

OBD II install: Use Supplied Posi-Lock® connectors to attach the Plug and Play Module to the Harness. Attach matching colors on the harness to the wires on the module. Plug in module to OBD II port on the vehicle. Secure harness with supplied tie wraps.

Note: If the OBD II pass thru harness (76404-01A) was purchased see install sheet supplied in packaging. The pass through harness allows for an open port for other accessories. See next page for a brief description.

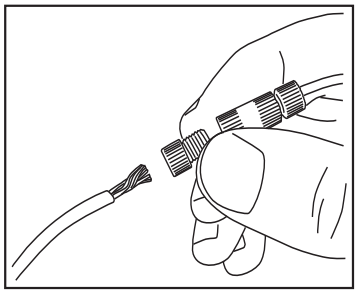

OBD II Connector located below steering column.

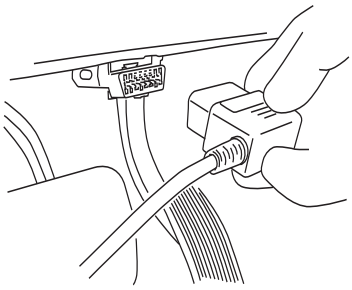

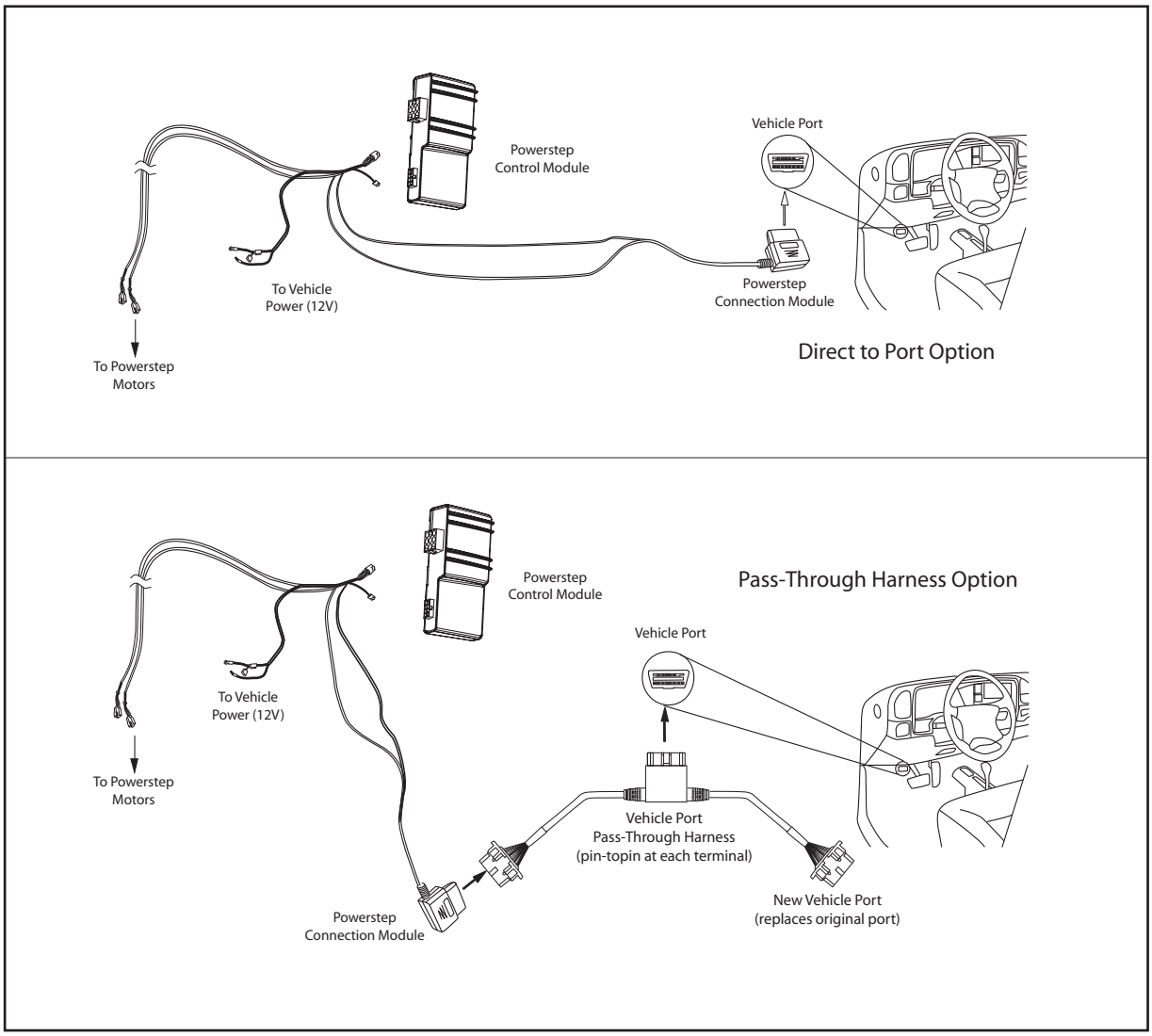

Route remaining wires up and over exhaust heat shield and back along each side to motors. Connect plug to motors.

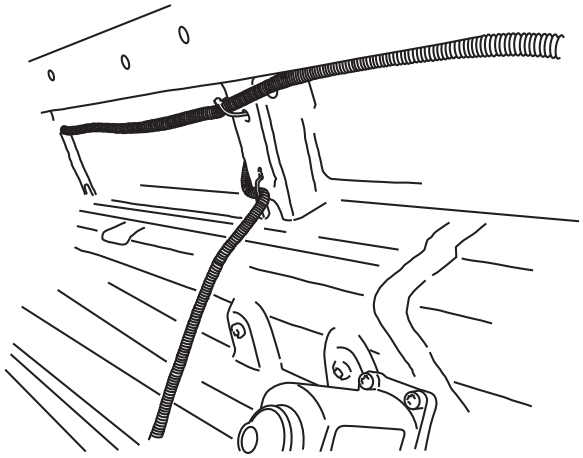

26

Replace all dash panels and sill plate covers.

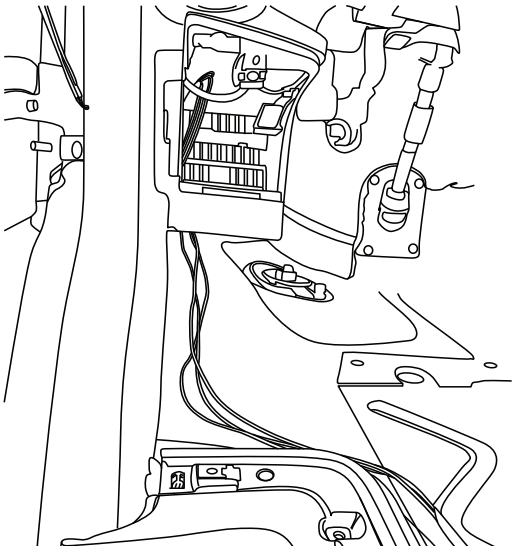

27

Some vehicles may have a shield shown. Verify Board does not come in contact with shield. If board contacts shield bend shield out of the way to prevent contact.

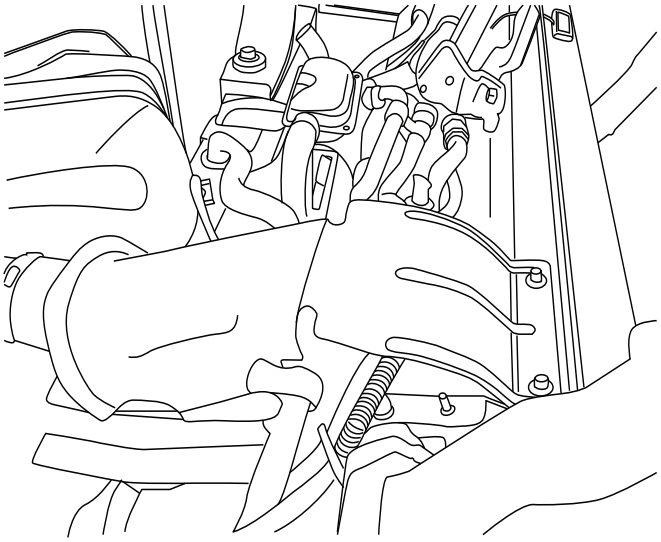

28

Measure from the front edge of door line on the pinch weld to the specified lengths below. Measure at 12” for the front LED Light and 60” for the rear LED Light.

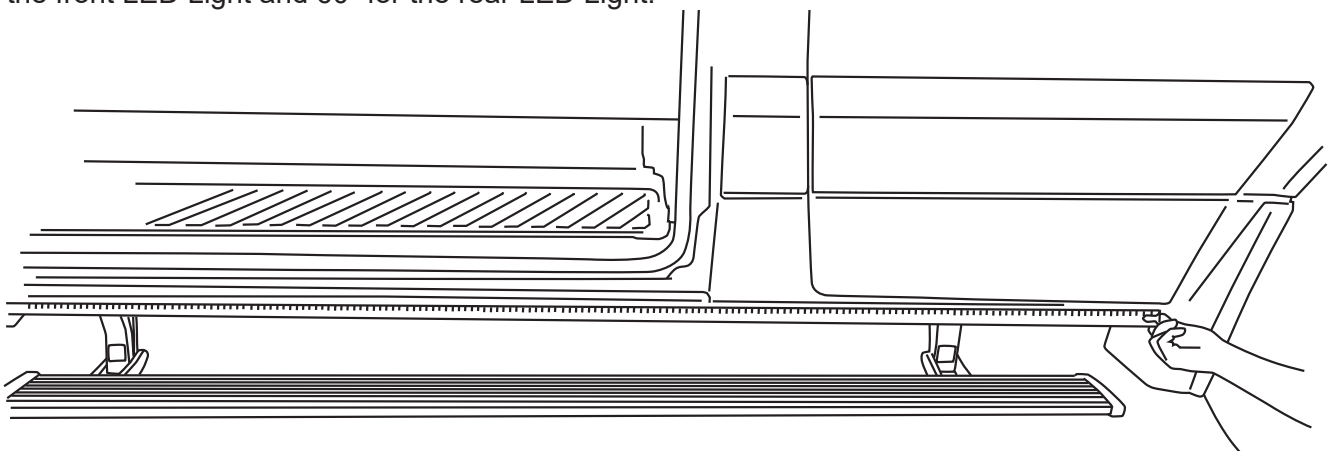

29

Drill a 9/32” hole through the pinch weld at marked locations. Debur all holes.

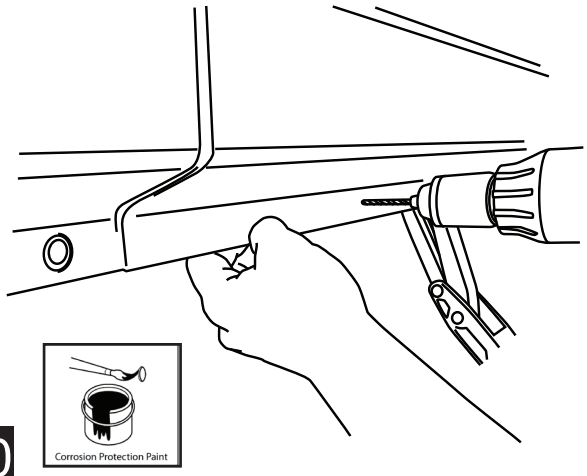

30

Insert grommet (25) into drilled holes. Insert lamp wires through the grommets. (Silicon lube will help wires slip through grommets.)

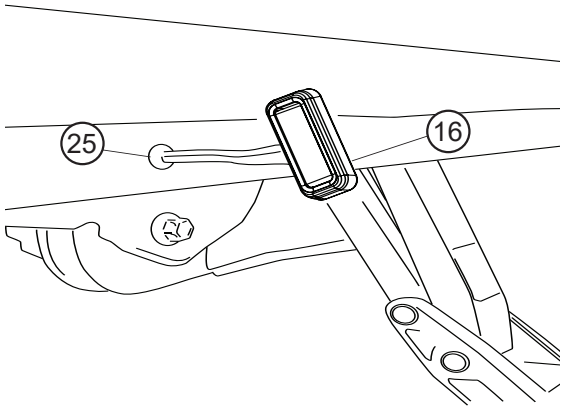

31

Affix lamp (16) to rocker panel surface. Make sure lamp is affixed to a flat, clean surface.

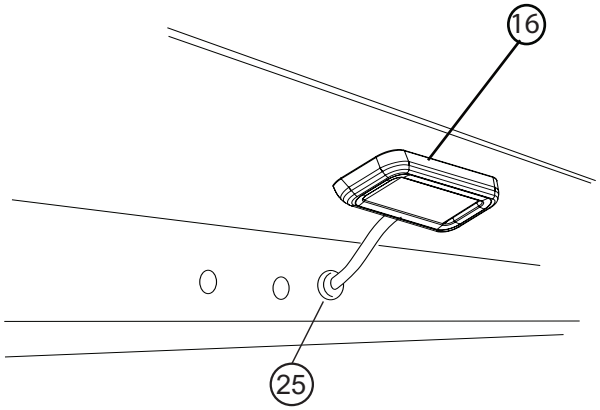

32

Using supplied butt connectors (17), connect the lamp wires. Red to Red, Black to Black

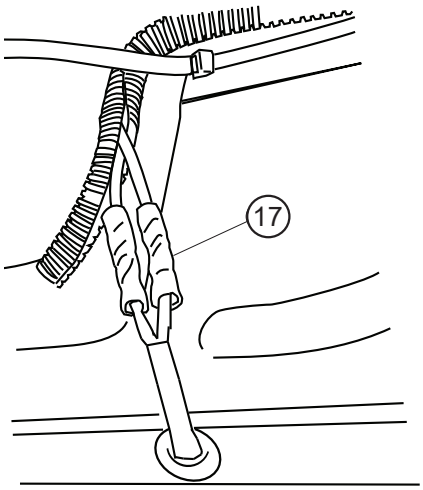

33

Use heat gun to shrink tube . Close and wrap conduit with electrical tape. Secure all loose wires with cable ties. Pull lamp wires upward to avoid any wire snagging.

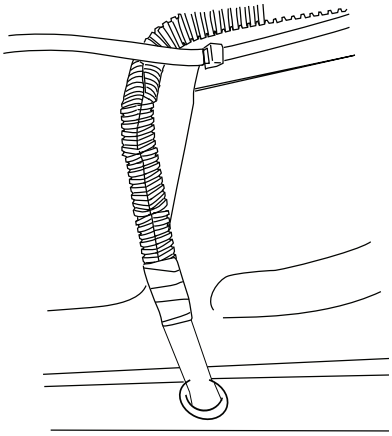

34

Reinstall fuse to wire harness.

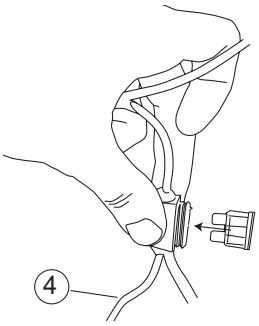

35

Check that all doors activate the Power Step and the LED Lights work when doors open and close. Reinstall any remaining trim panels.

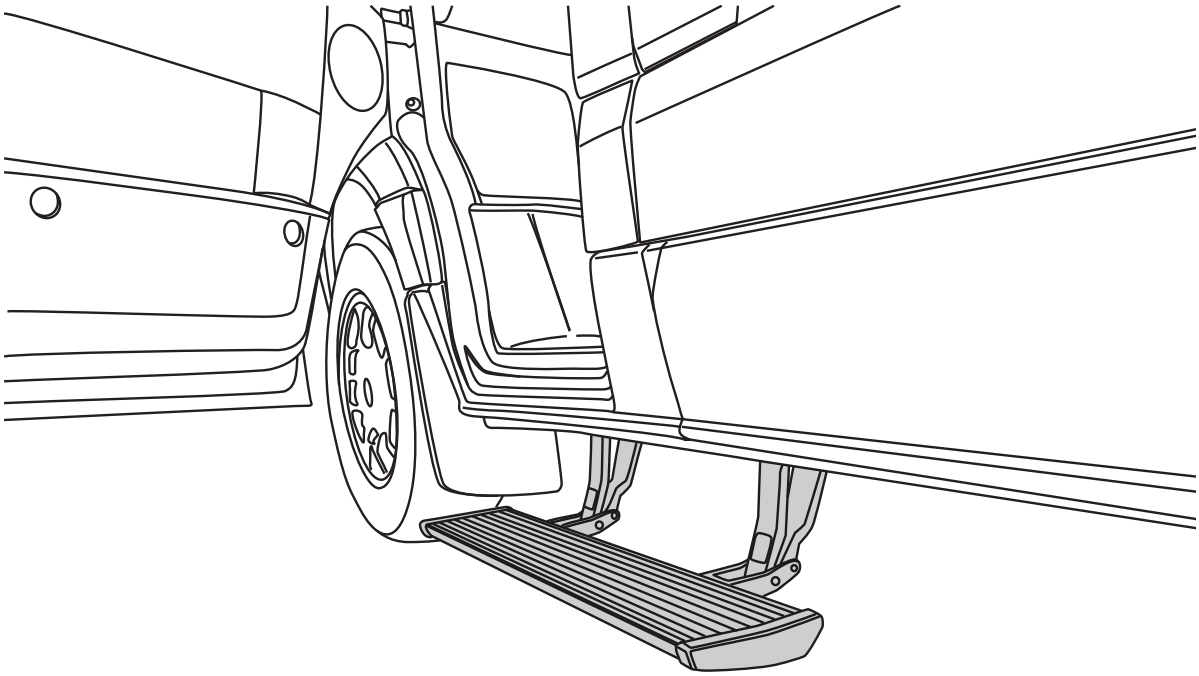

FINAL SYSTEM CHECK

Check that all doors activate the PowerStep and the LED lights work when doors open and close.

NORMAL OPERATION: When the doors open, PowerStep automatically deploys from under the vehicle. When the doors are closed, PowerStep will automatically return to the stowed/retracted position. ***Note that there is a 2-second delay before the PowerStep returns to the stowed/retracted position.***

CORRECT OPERATION OF LIGHTS: All four lamps will illuminate upon opening any door of vehicle. Lamps will stay on until restowing of both Power Steps or until 5 minutes has expired with the doors open. When the lights timeout after 5 minutes, they can be reillumintated by closing and opening any door of vehicle.

AMERICAN DESIGNED & ENGINEERED

Thank you for your recent RealTruck purchase.

REGISTER YOUR PRODUCT TODAY FOR FASTER SERVICE & PRODUCT UPDATES

Please visit:
https://realtruck.com/warranty-registration/
or scan the QR Code

SCAN ME

Product Registration Benefits:

• Ensure we have your purchase receipt and product info in our system which is required for warranty.

• Faster and easier access to customer service and tech support in the unlikely event you need warranty or product support.

• Registration helps us keep you up to date on product information and offers.

To view other RealTruck products that may be offered for your vehicle.

Please visit: www.realtruck.com

REALTRUCK AMP RESEARCH Power Step

Congratulations on your purchase of the genuine RealTruck / AMP Research PowerStep!
Here's what you should know...

POWER-DEPLOYABLE RUNNING BOARDS OPERATION: RealTruck / AMP Research PowerStep running boards automatically move when the doors are opened to assist entering and exiting the vehicle.

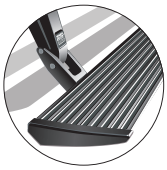

Automatic power deploy:
The running boards will extend down and out when the doors are opened.

Automatic power stow:
The running boards will return to the stowed position when the doors are closed. There will be a 2-second delay before the running boards move to the stowed position.

Automatic stop:
If an object is in the way of the moving running board, the running board will automatically stop. To reset, clear any obstruction, then simply open and close the door to resume normal operation.

Manually set in the deployed (OUT) position for access to the roof:
The running boards can be manually set in the deployed position by firmly holding the step down with your foot while at the same time closing the door. To resume normal operation, open and close the door.

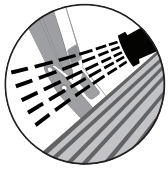

Maintenance: In adverse conditions, debris such as mud, dirt, and salt may become trapped in the running board mechanism, possibly leading to unwanted noise. If this occurs, manually set the running boards to the deployed position and flush the front and rear hinge arms with a high-pressure car wash wand. Avoid spraying the motors directly. After washing, apply silicone spray lubricant to the hinge pivot pins. Do not apply silicone, wax or protectants like Armor All® to the running board stepping surface.

Caution! Keep hands away when the running board is in motion.

5-YEAR LIMITED WARRANTY

RealTruck / AMP RESEARCH warrants this product to be free from defects in material and workmanship for FIVE (5) YEARS FROM DATE OF PURCHASE, provided there has been normal use and proper maintenance. This warranty applies to the original purchaser only. All remedies under this warranty are limited to the repair replacement of the product itself, or the repair or replacement of any component part thereof, found by the factory to be defective within the time period specified. The decision to repair or replace is wholly within the discretion of the manufacturer.

This warranty specifically excludes labor. If you have a warranty claim, first you must call our factory at the number below for instructions. You must retain proof of purchase and submit a copy with any items returned for warranty work. Upon completion of warranty work, if any, we will return the repaired or replaced item or items to you freight prepaid. Damage to our products caused by accidents, fire, vandalism, negligence, misinstallation, misuse, acts by nature or by defective parts not manufactured by us, is not covered under this warranty.

ANY IMPLIED WARRANTIES OF MERCHANTABILITY AND/OR FITNESS FOR A PARTICULAR PURPOSE CREATED HEREBY ARE LIMITED IN DURATION TO THE SAME DURATION AND SCOPE AS THE EXPRESS WRITTEN WARRANTY. OUR COMPANY SHALL NOT BE LIABLE FOR ANY INCIDENTAL OR CONSEQUENTIAL DAMAGE.

Some states do not allow limitations on how long an implied warranty lasts, or the exclusion or limitation of incidental or consequential damages, so the above limitations or exclusions may not apply to you. This warranty gives you specific legal rights, and you may also have other rights that vary from state to state.

FOR WARRANTY ISSUES WITH THIS PRODUCT PLEASE CALL REALTRUCK TECH SUPPORT 1-888-983-2204

WARNING

Be sure to read and precisely follow the provided instructions when installing this product. Failure to do so could place the vehicle occupants in a potentially dangerous situation. After installing or reinstalling, re-check to insure that the product is properly installed.