Power Step

APPLICATION	MODEL YR	PART #
Chevrolet Colorado / GMC Canyon - Crew Cab 72”	**2023 - 2026**	**76253-01A**

INSTALLATION GUIDE

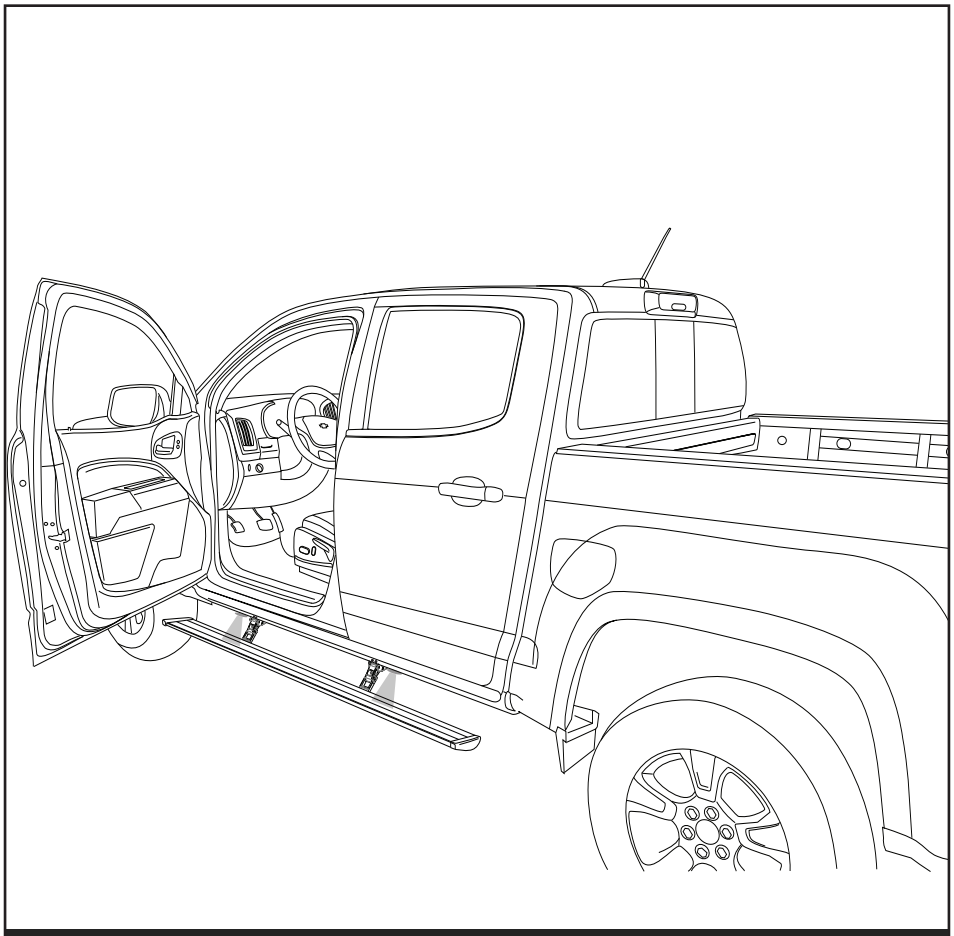

with NEW Brose 2 Motor Design

INSTALLATION TIME
3-5 Hours
Professional installation recommended

SKILL LEVEL
1 2 3 4
4= Experienced

TOOLS REQUIRED
- ❑ Safety goggles
- ❑ Measuring tape
- ❑ 9/16 Wrench
- ❑ 17/32” Drill bit
- ❑ 10 mm socket
- ❑ 10 mm ratchet wrench
- ❑ 13 mm ratchet wrench
- ❑ Ratchet wrench and extension
- ❑ Pliers
- ❑ Wire crimpers
- ❑ Wire stripper / cutter
- ❑ 3/16” hex key wrench (allen wrench)
- ❑ 5mm allen wrench
- ❑ Electrical tape
- ❑ Weather proof caulking (silicone sealer)
- ❑ 1/8”, 9/32” & 21/64” Drill bit
- ❑ Drill
- ❑ Torx T-25 Driver

WARRANTY
5-Year Limited Warranty

REALTRUCK TECH SUPPORT 1-888-983-2204 (Press 2) Monday - Friday, 8:00 AM - 5:00 PM EST

Designed and manufactured by RealTruck AMP Research® • Made in Mexico
Patent Protected. Please see our product site for applicable patents. www.realtruck.com/b/amp-research/
© RealTruck Group, Inc., 2026 • Five-year limited warranty. • Professional installation is recommended.

INSTALLATION GUIDE
Attaching motor to Linkage assembly

The motors must be attached to the Linkage before installation.

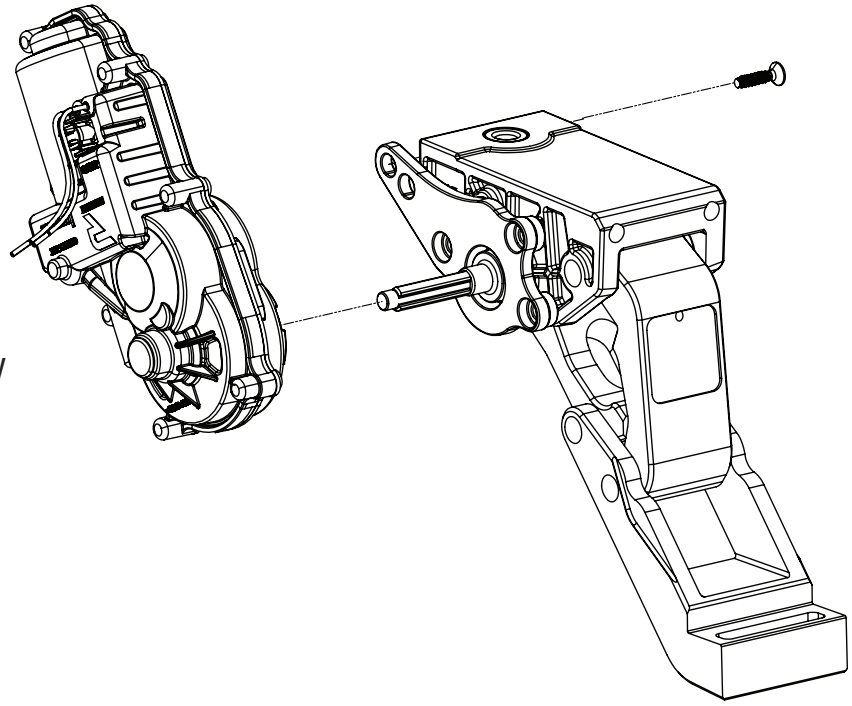

EXPLODED VIEW

- Motor
- Fastener

To ensure our customers receive all components with full integrity, we pack the motors separate from their Linkage assemblies. This requires that the installer position and fasten the motor before continuing with the install. Please follow the instructions below and handle the assembly carefully.

CAUTION: Dropping the assembly or any excessive impact MAY cause damage to the motor.

Instructions:
1. Slide motor on to drive shaft.
2. Rotate motor by hand while on the shaft to postion it to the mounting plate (orientation as shown above).
3. Fasten motor to the motor mounting plate using supplied PT Screw with T-25 Torx driver. Tighten screw to 60 in-lbs (6.8 N·m). **Do not over torque.**

Note:
The motor and shaft have only three possible positions. Depending on the current position of the motor, motor/shaft and the orientation of the motor plate, it may be necessary to power it in order to align it correctly with the linkage and shaft during assembly so that the motor can be mounted to the mounting plate.
To do this:
1. Power up the motor.
2. Open the door to allow the motor to spin and reposition.
3. Once the motor times out, remove the fuse.
4. Assemble the motor onto the shaft.
5. Fasten motor to mounting plate.

This process may need to be repeated to achieve the correct alignment.

PARTS LIST AND HARDWARE IDENTIFICATION

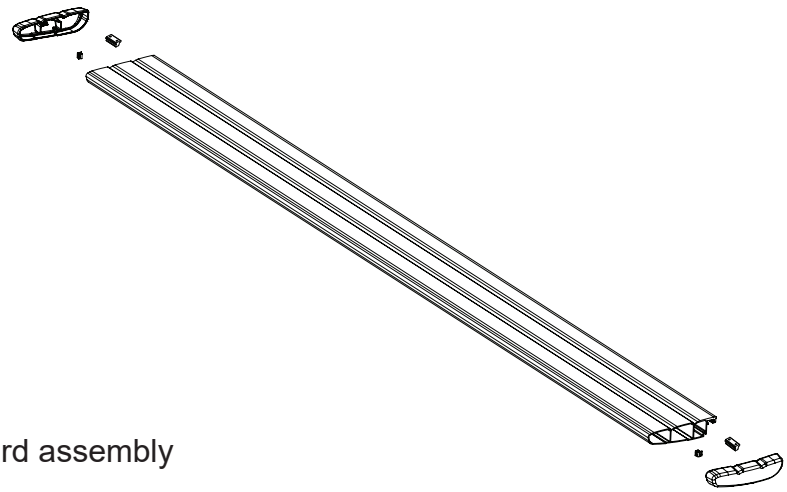

(A) End cap left (x1)
(B) End cap right (x1)
(C) T-nut insert (x2)
(D) (S) Style clips (x2)

1 x2
Running Board assembly

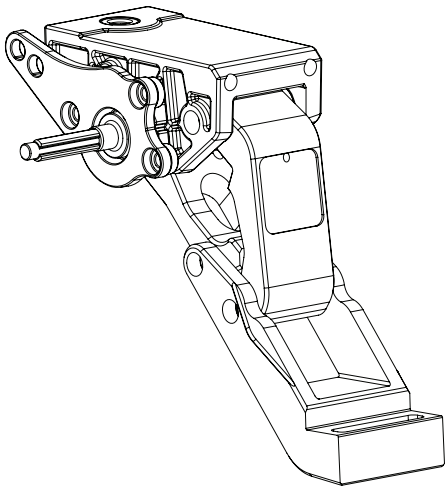

2 x2
Motor Linkage Assembly

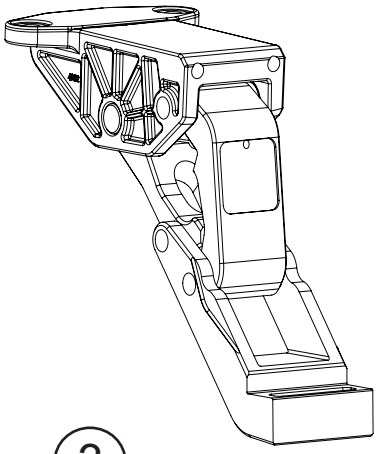

3 x2
Idler Linkage Assembly

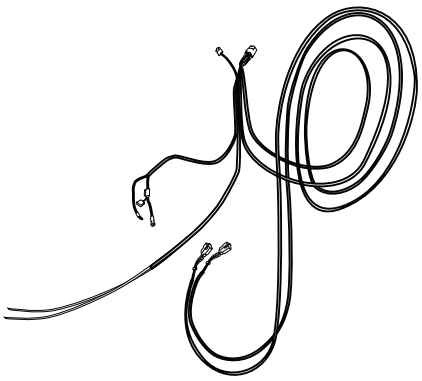

4
Wire Harness

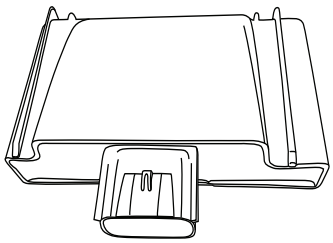

5
Controller SSA

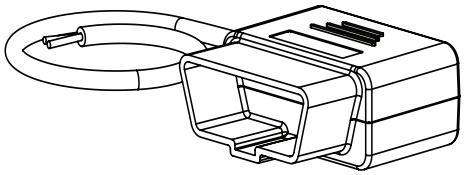

6
ODB II Plug

PARTS LIST AND HARDWARE IDENTIFICATION

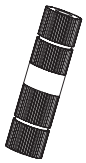

7 x2
Posi Tap

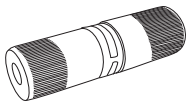

8 x4
Posi-Tite®

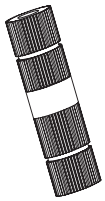

9
Posi-Lock Connector

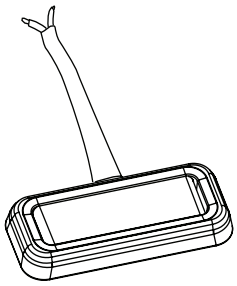

10 x4
LED Lamp

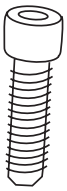

11 x8
Socket Cap Screw

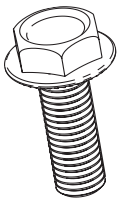

12 x 4
Hex Flange Bolt

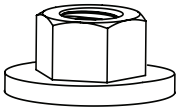

13 x4
Nut w Conical washer

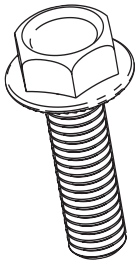

14 x8
Hex Flange Bolt

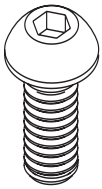

15 x8
Button Head Bolt

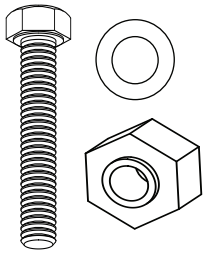

16
Rivet Nut Tool Kit

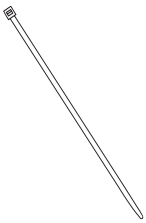

17 x20
Cable Tie 7”

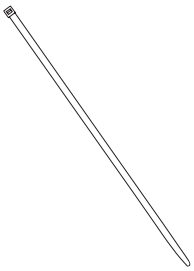

18 x2
Cable Tie 11”

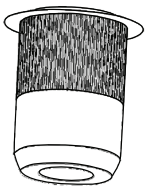

19 x4
Rivet Nut

20 x8
Washer Black

21 x5
Grommet

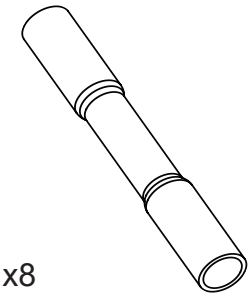

22 x8
Butt Connector

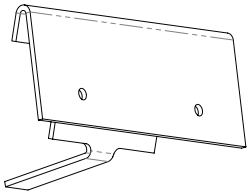

23
Colorado Drill Template

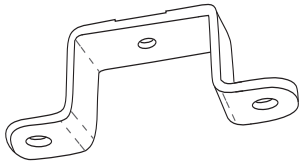

24 x2
Bracket

Installing Linkages

Front Linkage - Idler Linkage

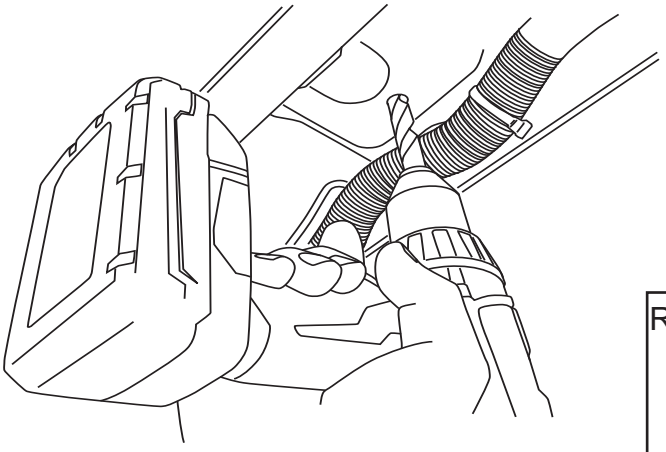

Enlarge the hole on the front body support member. Hole is located approx. 29” from front fender edge. Use a 17/32” Drill bit. Install a rivet nut (19) using the supplied rivet nut tool (16).

Rivet Nut tool kit

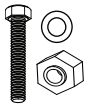

1

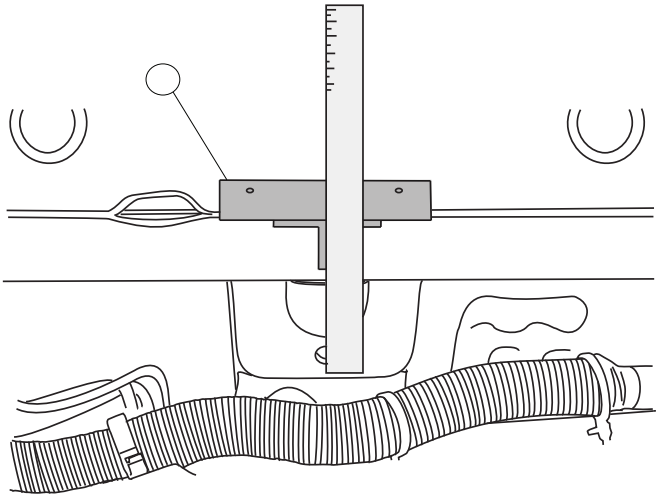

Place tail of drill template (23) on the inner rocker surface and slide it until the template rests on the outside of the pinchweld. Use a straight edge as shown to line up the center of the template with the center of the mounting hole in the body crossmember.

2

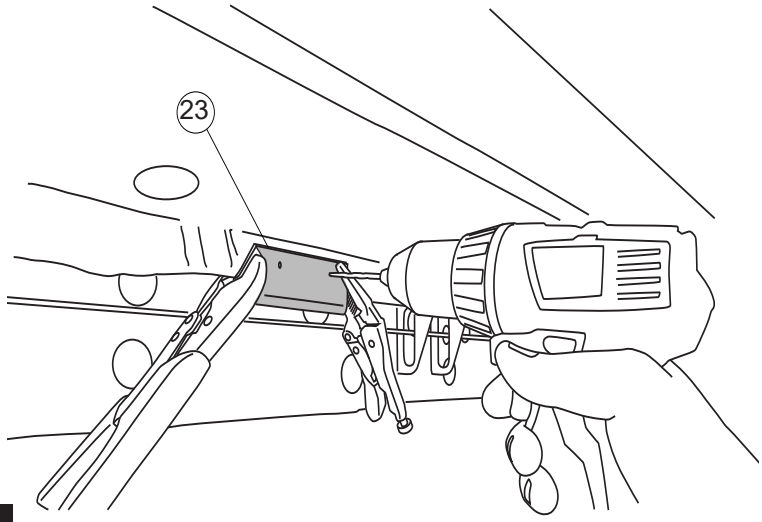

With drill template secured with vise grips, drill 1/8” Pilot holes. Remove template and drill holes to 21/64”.

Only clamp Template on the sides as shown, clamping only the outer thickness of the template and the pinchweld. Do not clamp the template in the center as this will damage the template and improperly locate the holes.

3

Snug the front linkage bracket (24) to the rivenut first. **Note**: bracket to be oriented closest to the frame.

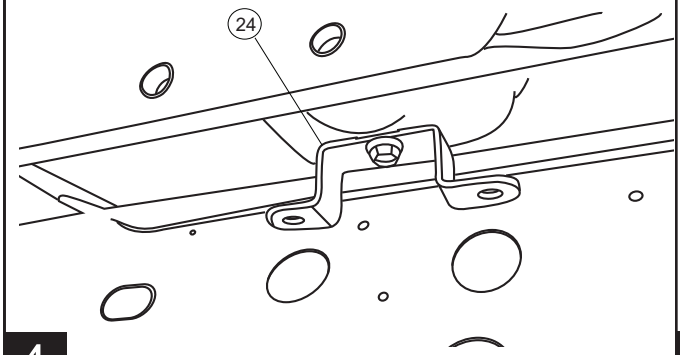

4

Install front linkage (3) to the pinch weld using supplied M8 button head bolts (15) and M8 washers (20), snug bolts. Next, using the supplied Hex flange bolts (12) and Serrated nuts (13) tighten linkage upper mount to steel bracket assembled in step 4. Snug bolts to allow for adjustments at a later step.

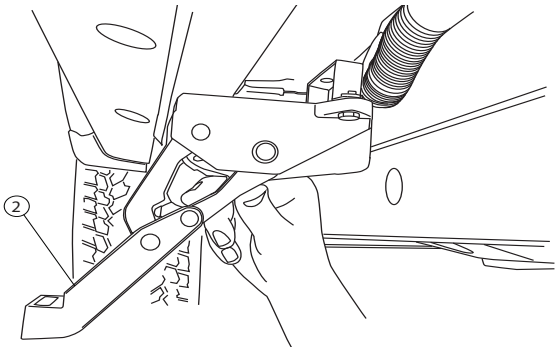

5

Repeat Steps 1-5 on the passenger side of the vehicle.

Rear Linkage - Motor Linkage

On the driver side, line up the rear bracket up to the triangle piece to the center of the template.

With drill template secured with vise grips, drill 1/8” Pilot holes. Remove template and drill holes to 21/64”.

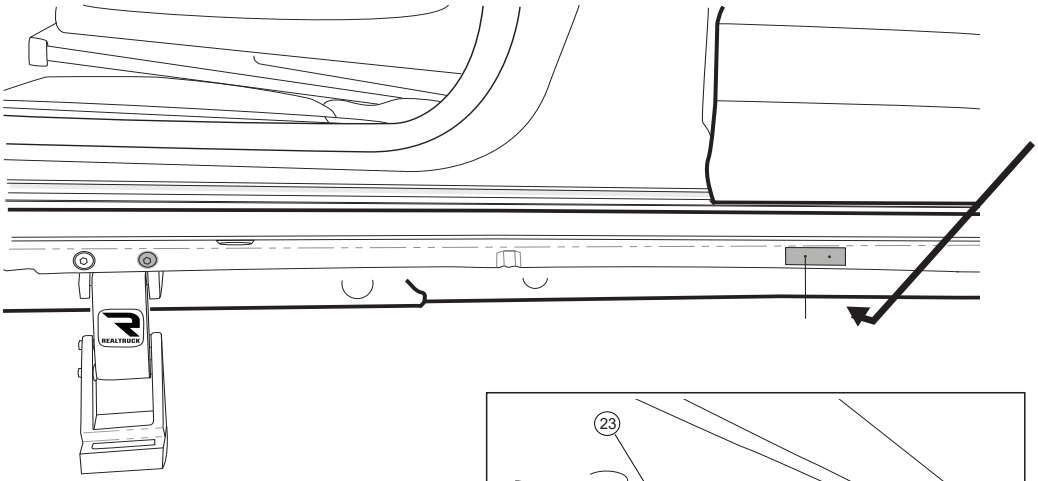

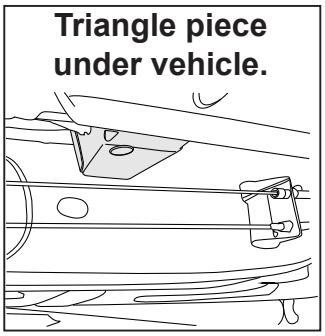

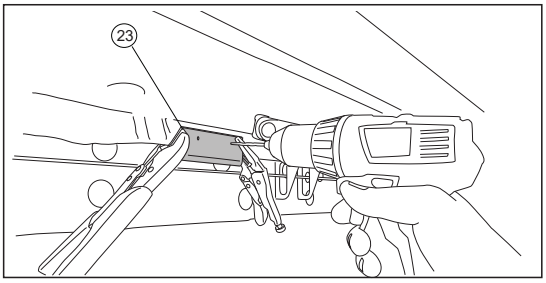

6

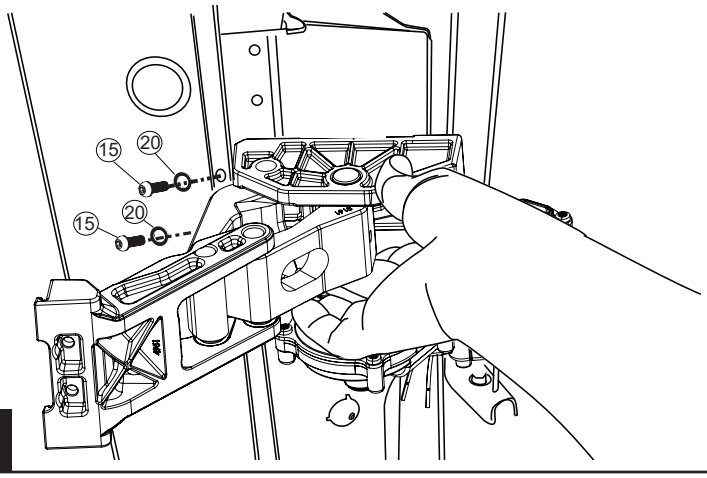

Install rear linkage (3) to the pinch weld using the supplied M8 button head bolts (15) and M8 washers (20).

7

Mark the hole in linkage, and remove the the two bolts installed in previous step. Remove linkage.

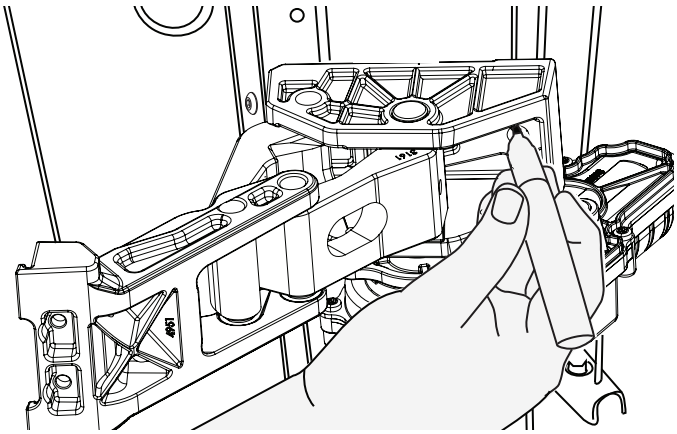

8

Center punch and pre drill using an 1/8” drill bit. Next drill hole to 17/32”. Then install a rivet nut (19) into the hole using supplied rivet nut tool (16).

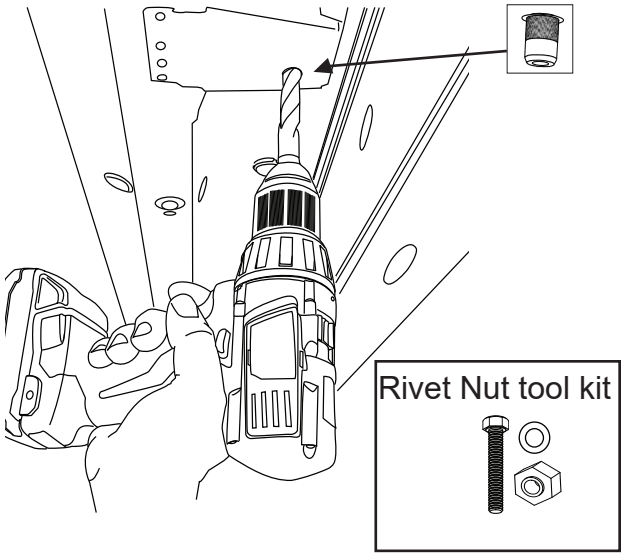

9

Reinstall the rear linkage. First, tighten the pinch weld bolts (15) then tighten the bolt (14) to the rivnut (19) as seen below.

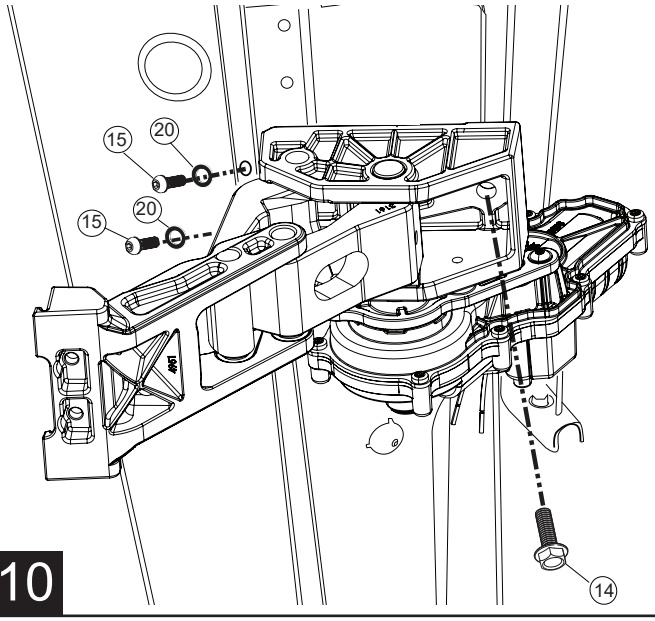

10

Repeat Steps 6 - 10 on the passenger side of the vehicle.

Remove Fuse from harness. Plug harness to controller and ensure that locking tabs are engaged. Attach controller horizontally to driver side wire loom. Secure with 11” cable ties. Attach ground lead to the negative battery terminal. Open the power distribution block cover and connect the Power wire to the positive power battery cable terminal.

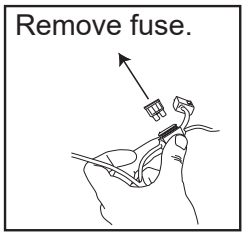

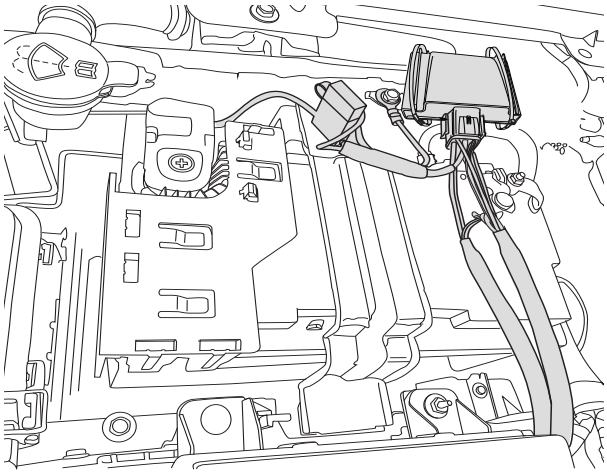

11

Route the two wire harness leads towards the firewall, the longer leg will run across to driver side of vehicle. Secure harness with supplied tie wraps. Attach to hose at the back of the engine cover.

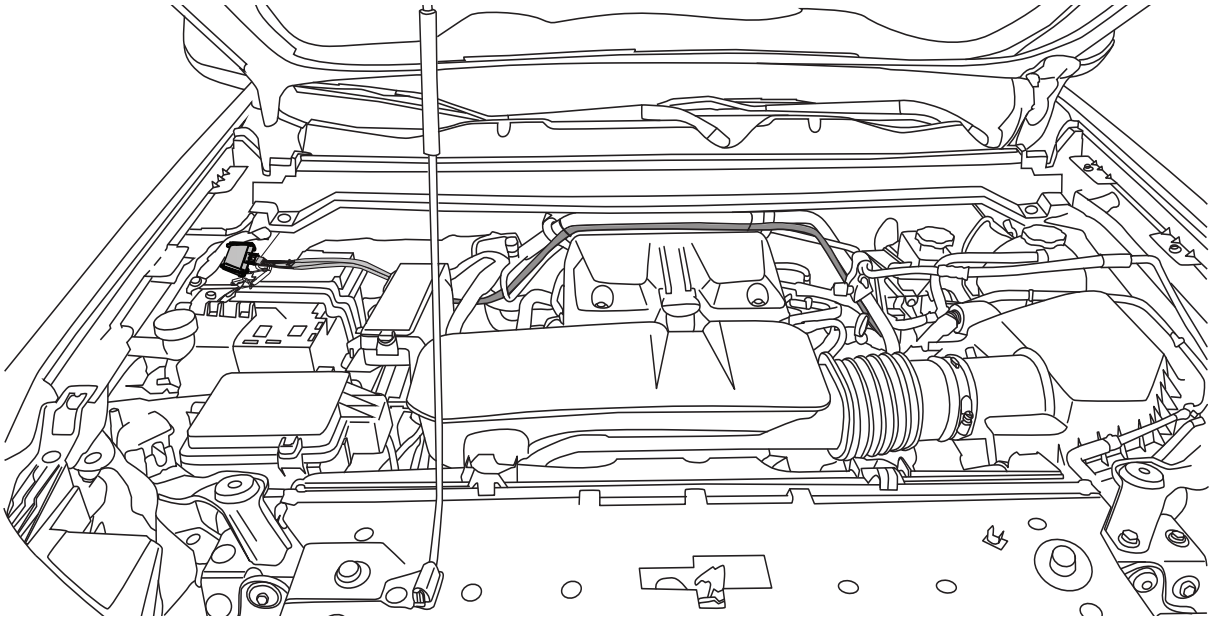

12

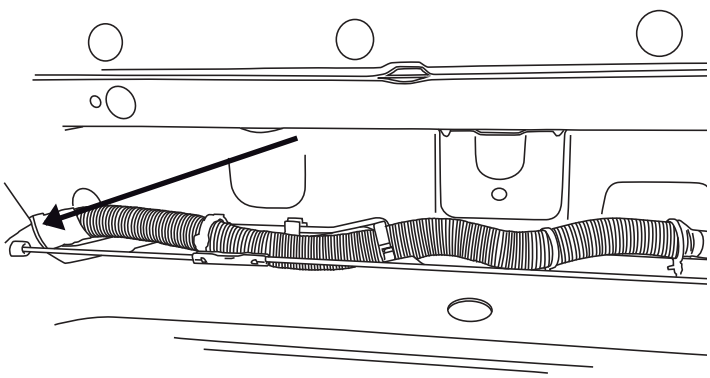

Route harness along the body mount bracket and zip tie to the factory harness. The purple wires will go through plastic plug in the floor in step 16. Then wire the motor to the harness using instructions in next step.

13

Before proceeding, see spin direction of the each motor than proceed with step A or B below. Use Method A for Driver & Passenger motors.

A. Motor spinning the shaft clockwise direction:

1) First, install one Posi-Tite® (8) onto white wire from the motor. See image on right.

2) Install second Posi-Tite® (8) onto orange wire from motor. See image on right.

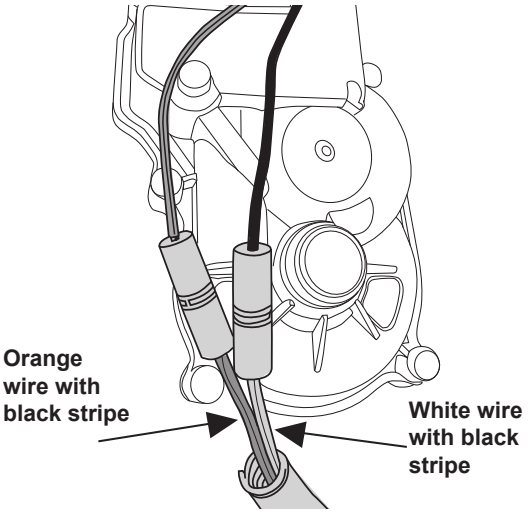

3) Next, connect the white wire with black stripe from the wire harness to the other end of the Posi-Tite® (8) that is connected to the all white wire from first step above.

4) Connect the Posi-Tite® (8) the orange wire from the motor with the orange with black stripe wire from the harness.

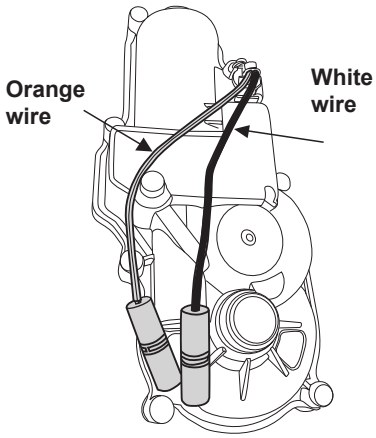

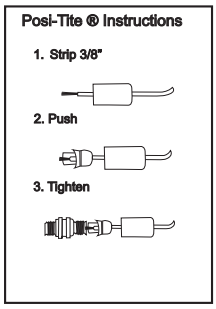

B. Motor spinning the shaft counter clockwise direction:

1) First, install one Posi-Tite® (8) onto white wire from the motor. See image on right.

2) Install second Posi-Tite® (8) onto orange from motor. See image on right.

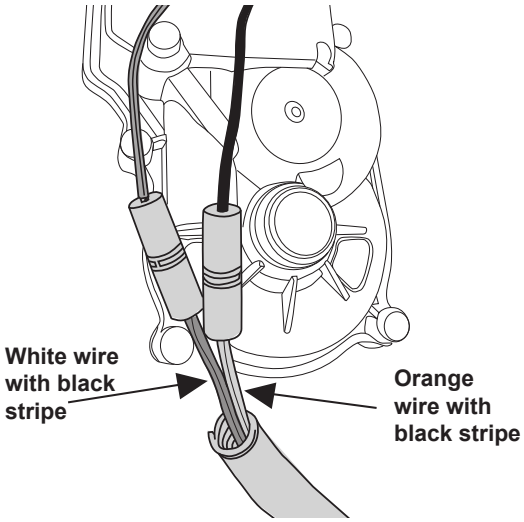

3) Next, connect the orange wire with black stripe from the wire harness to the other end of the Posi-Tite® (8) that is connected to the all white wire from first step above.

4) Connect the Posi-Tite® (8) the orange from the motor with the white with black stripe wire from the harness.

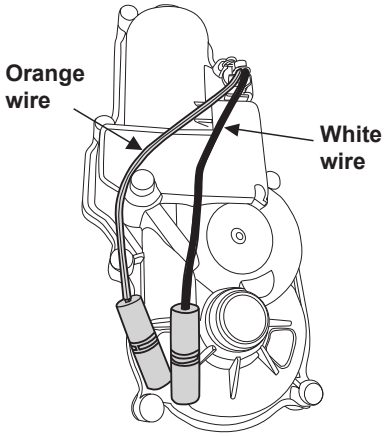

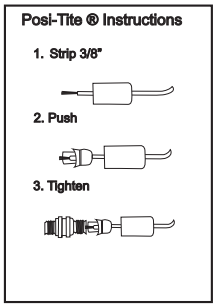

First, remove side dash panel. Second, remove sill plate cover. Third, remove lower dash panel.

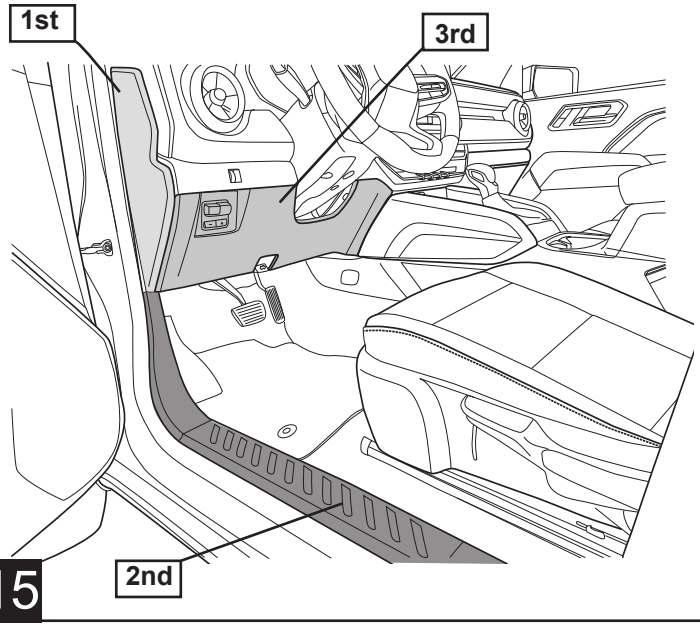

15

Remove dash cover panel & use 7mm socket to remove screw securing the dash panel in place.

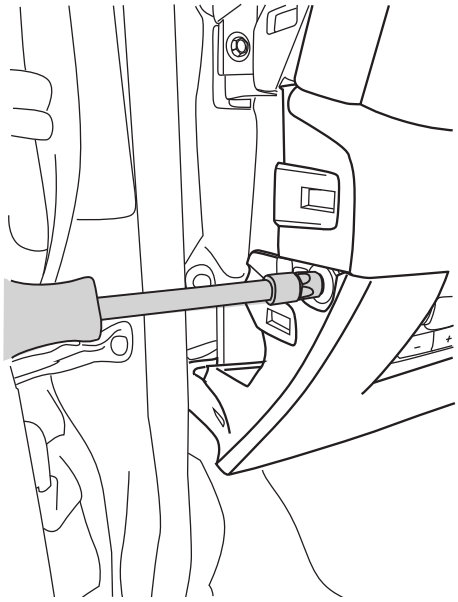

16

Remove the drivers side door sill trim-panel, by pulling up and back.

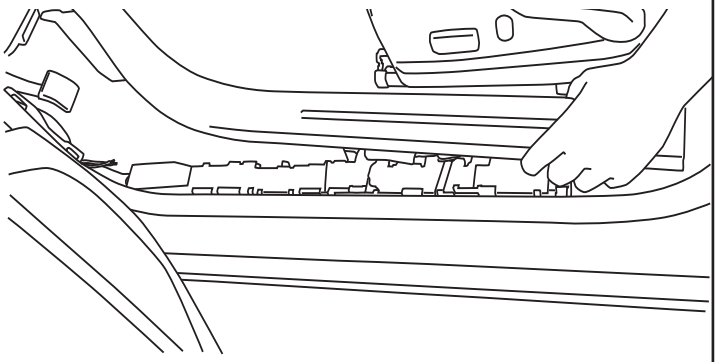

17

Remove 2 screws at bottom of dash panel using a 7mm socket. Pull dash panel out.

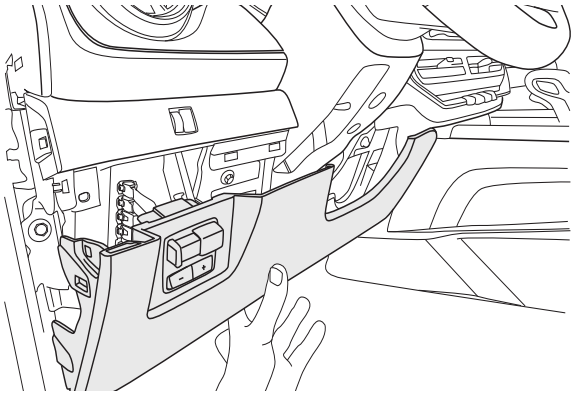

18

Lift the carpet to expose the plastic in-floor plug. Drill a 9/32” hole in the middle and insert the supplied rubber grommet (22).

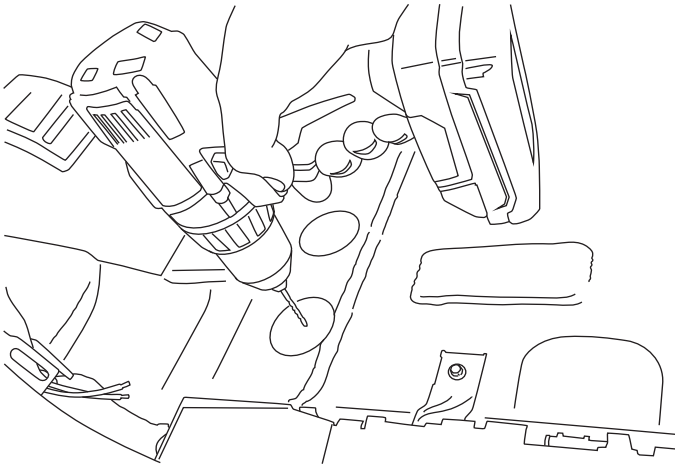

19

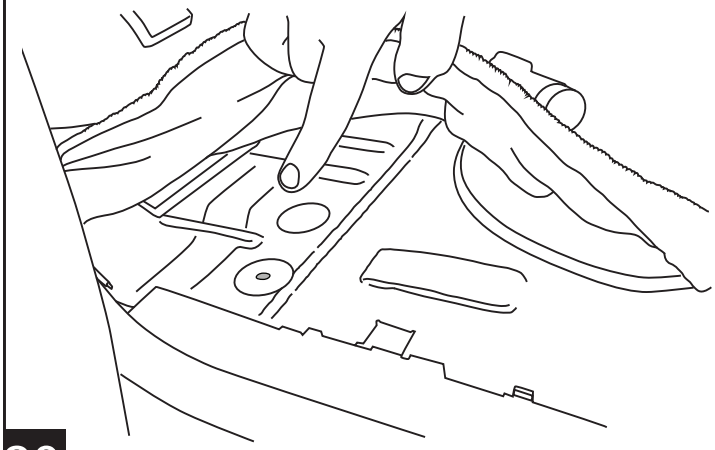

Pull the purple trigger wires through the grommet from below. Use the Posi Locks (11) to make the connection to the plug and play module.

20

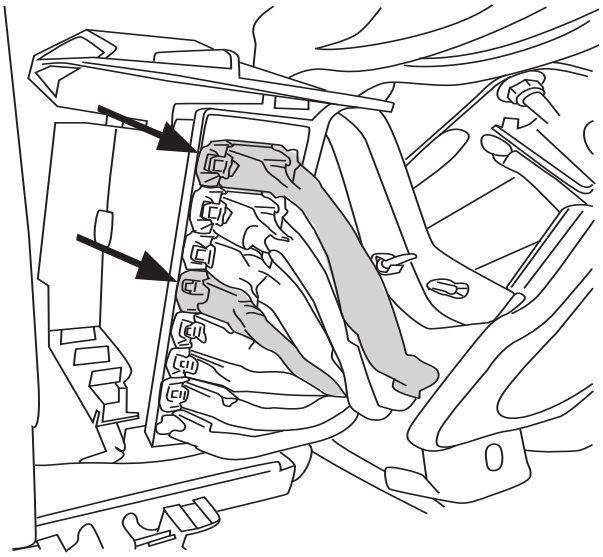

Locate dark grey and light green connectors in bank of plugs.

Dark grey - Top plug.

Light green - 4th plug from top.

21

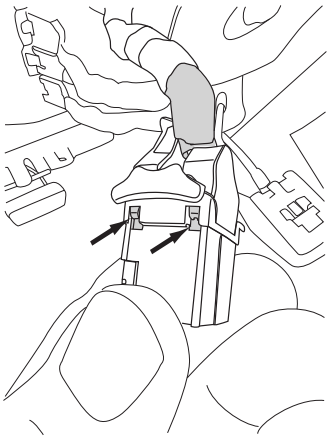

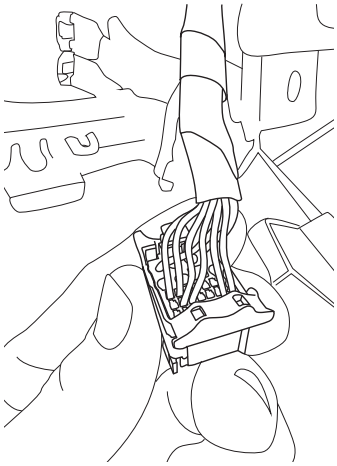

Remove soft electrical tape from end of plug. Next, use scribe and press in clips on black plug cap. Rotate cap off to gain access to wires.

22

a. On dark grey connector, locate the **Light Green/Grey stripe** wire located in pin location 29. Use supplied Posi-tap™ (26) and connect the blue wire from the OBD module (6).

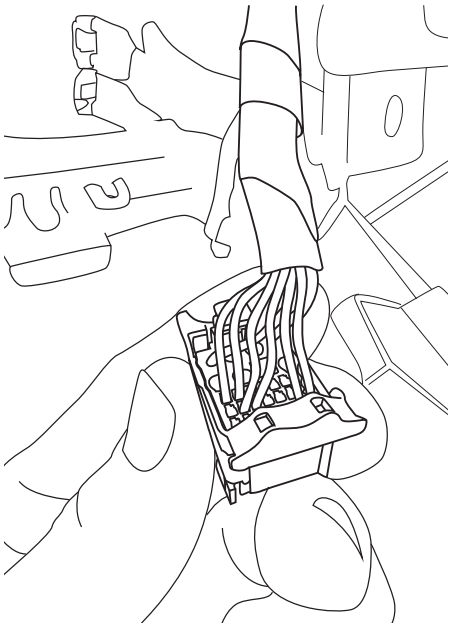

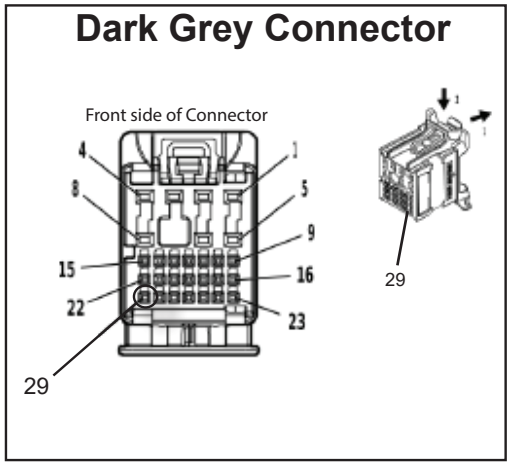

b. On light green connector, locate the **Green/Yellow stripe** wire located in pin location 19. Use supplied Posi-tap™ (26) connector and connect the white wire from the OBD module (6).

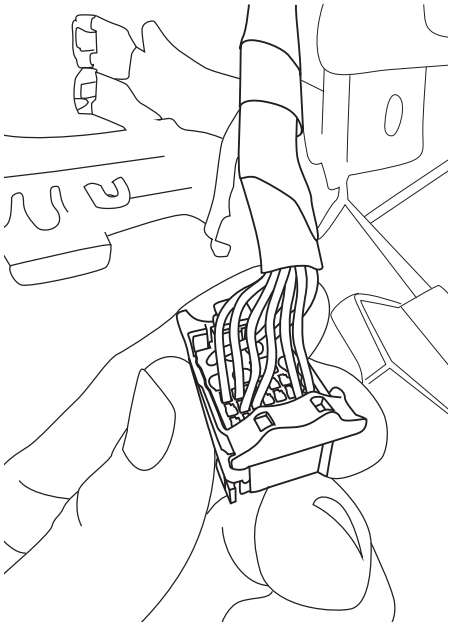

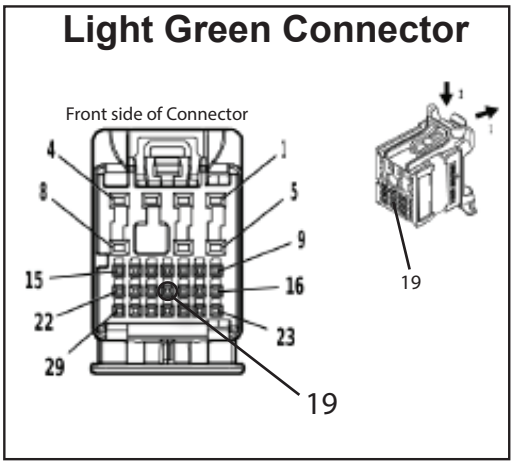

Wire OBD II connector with Posi-Splice.

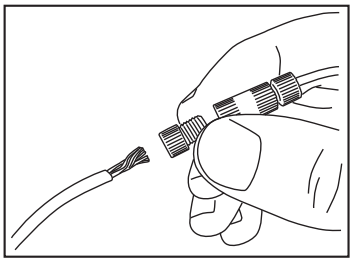

OBD II Connector located below steering column.

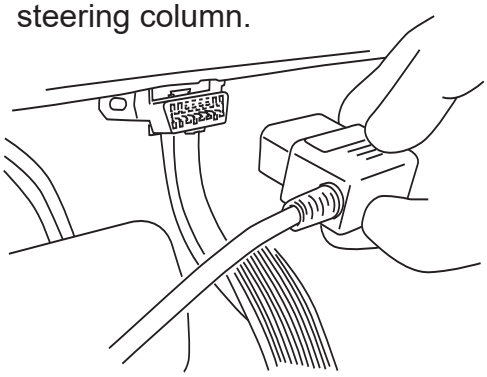

OBD II install: Use Supplied Posi-Lock™ connectors to attach the Plug and Play Module to the Harness. Attach matching colors on the harness to the wires on the module. Plug in module to OBD II port on the vehicle. Secure harness with supplied tie wraps. ***Note: If the OBD II pass thru harness (76404-01A) was purchased see install sheet supplied in packaging. The pass through harness allows for an open port for other accessories. See below for a brief description.***

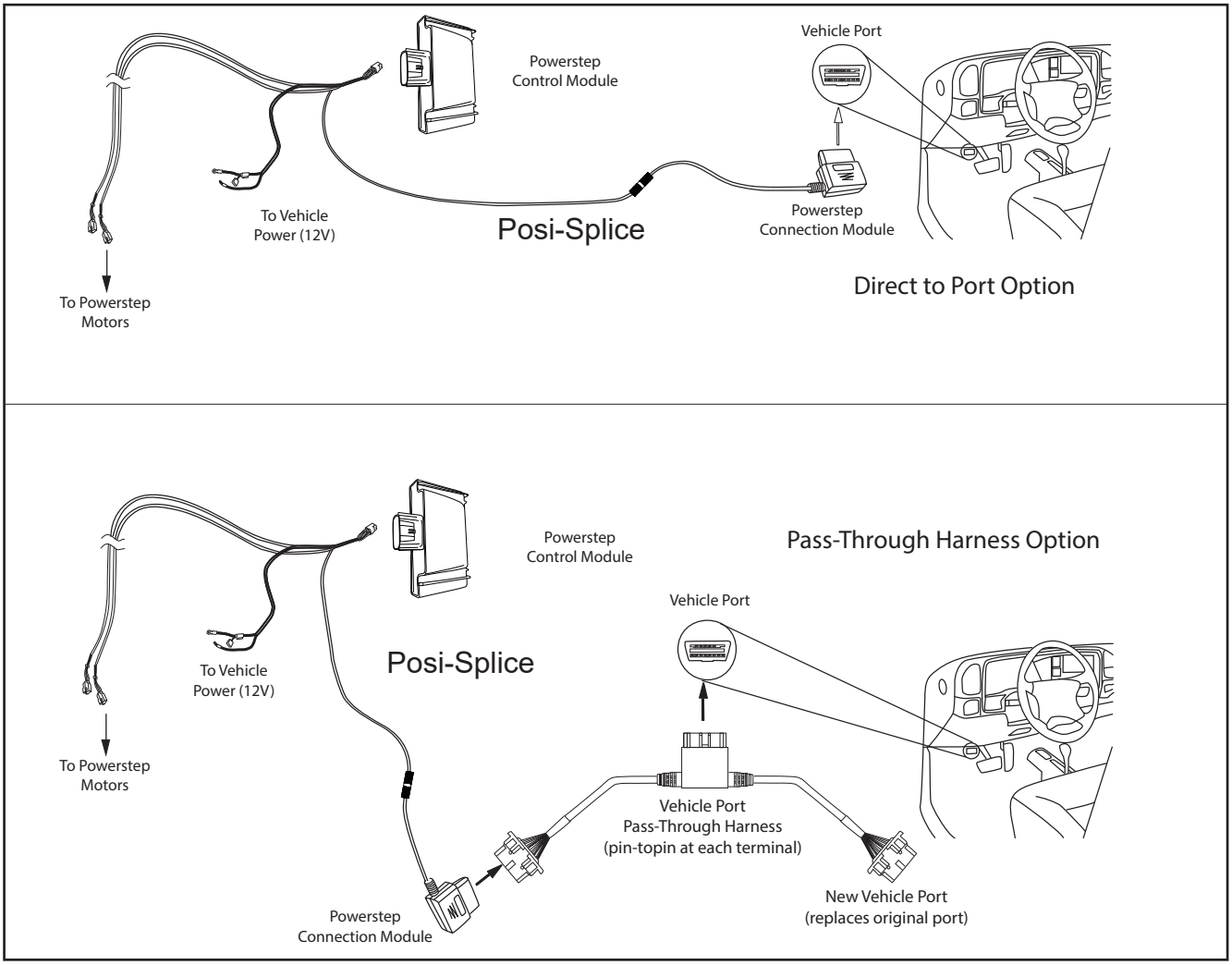

On each side of the vehicle measure from the rear edge of the front linkage on the pinch weld 1.5” back and mark. Measure 3” from the rear edge of the rear linkage and mark.

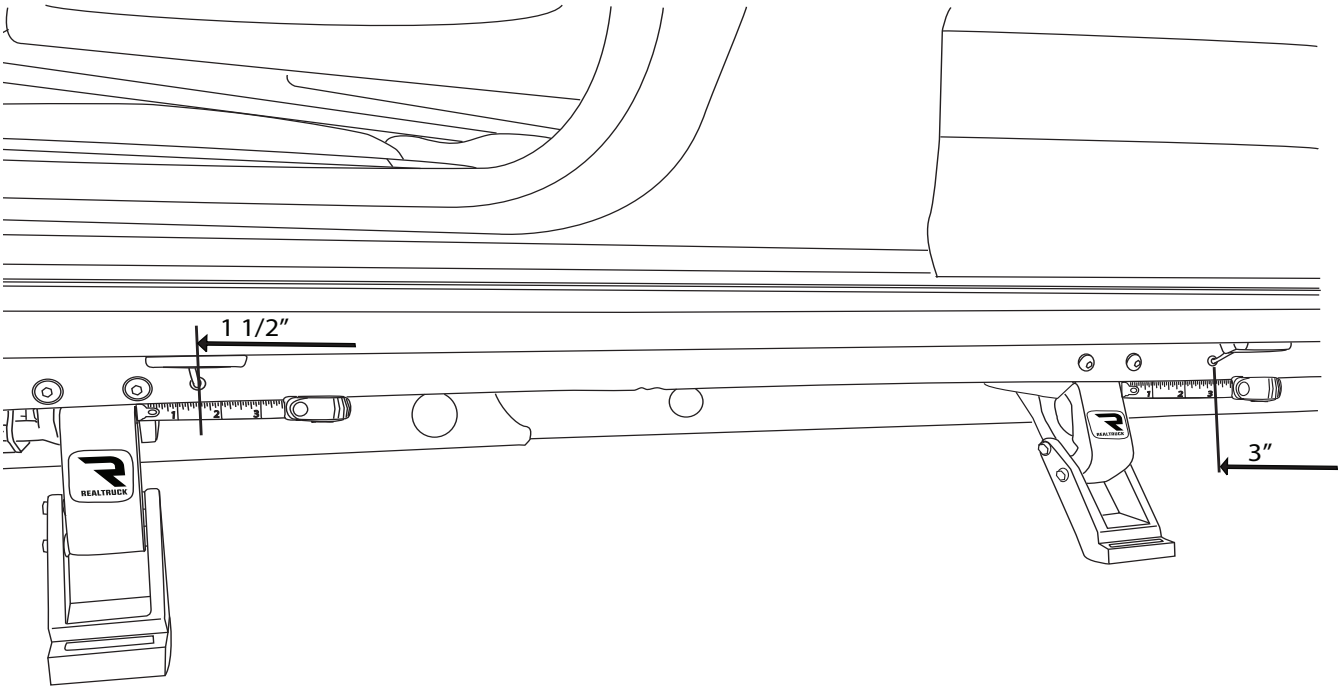

25

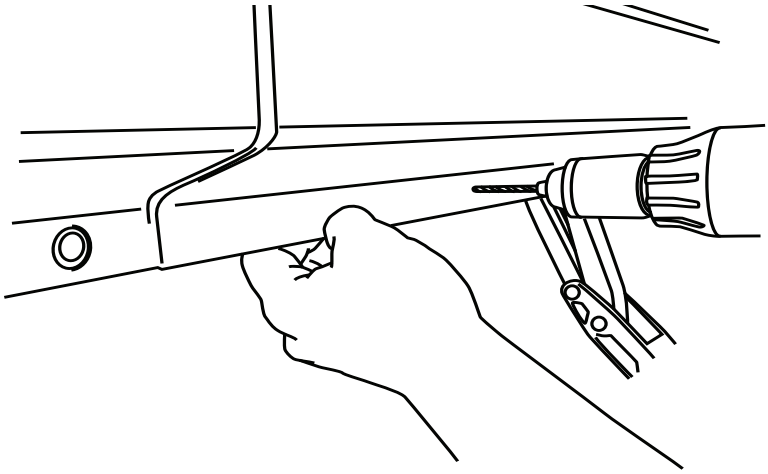

Center punch and drill a 1/8” pilot hole then drill a 9/32” hole through the pinch weld at marked locations. Deburr all holes. After drilling apply paint to holes to prevent rusting.

26

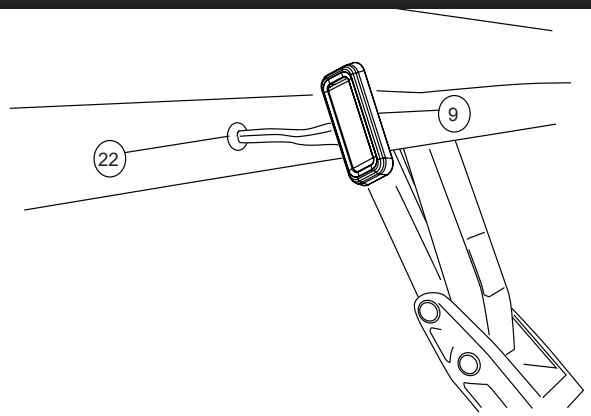

Insert grommet into drilled holes. Insert lamp wires through the grommets. (Silicon lube will help wires slip through grommets).

27

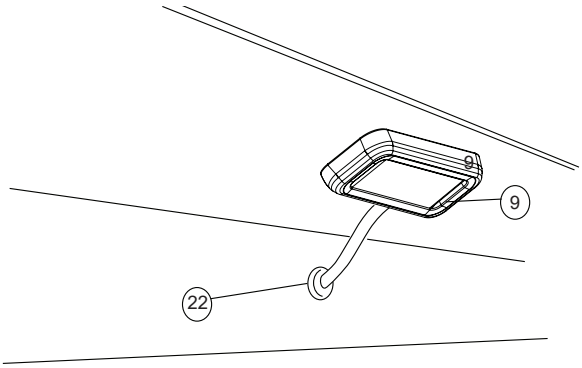

Affix lamp to rocker panel surface. Make sure lamp is affixed to a flat, clean surface.

28

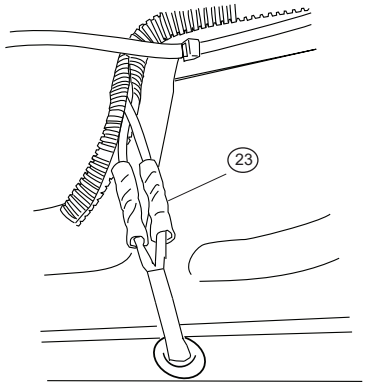

Using supplied butt connectors, connect the lamp wires. Red to Red, Black to Black. Once Crimped use heat gun to shrink tube.

29

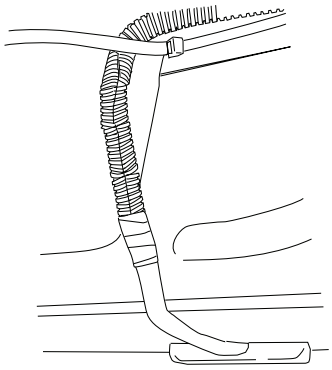

Close and wrap with conduit and electrical tape. Secure all loose wires with cable ties, with lamp wires pulled upward to avoid any wire snagging.

30

Next, mount step extrusion to linkage assemblies. Line up t-nuts in step assembly with slots in lower mounts of linkage assemblies. Tighten 4 socket cap screws (10) with 3/16” allen wrench. Fasten loosely to allow for adjustments.

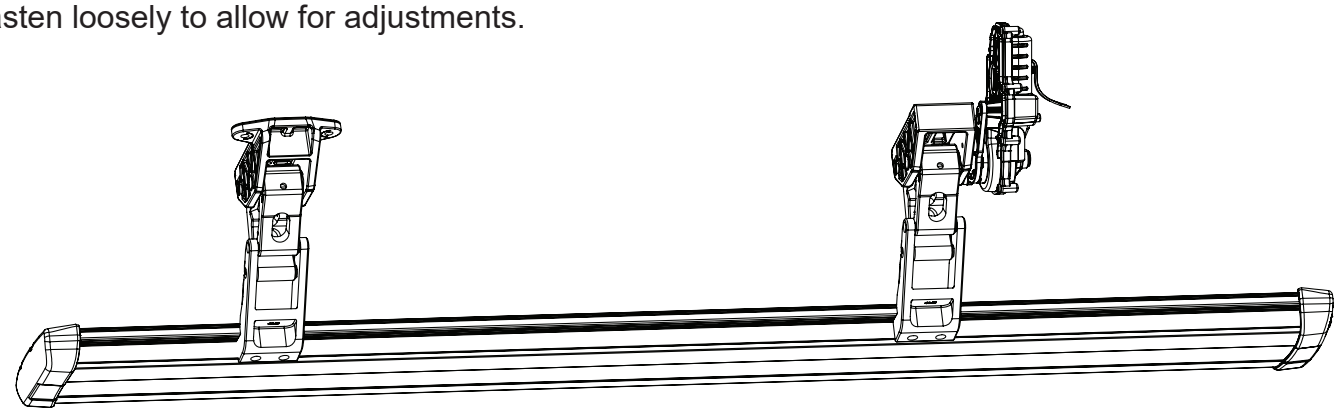

31

Line up the front edge of the board just behind the front fender trim. Repeat on passenger side. Torque the bolts to the step extrusions to 10 ft-lbs(13.5 N m).

Install running board to linkages, measure approximately 19” back from linkages to tip of board.

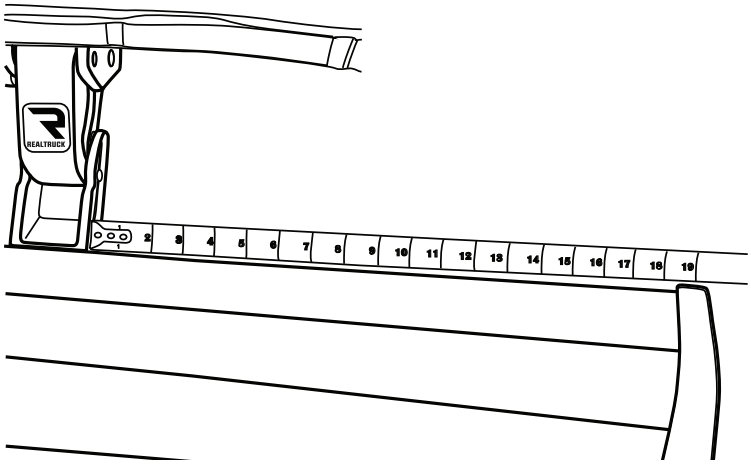

32

Front & Rear Linkages on Driver and Passenger side: Torque fasteners to 16 ft-lbs. (22 N m).

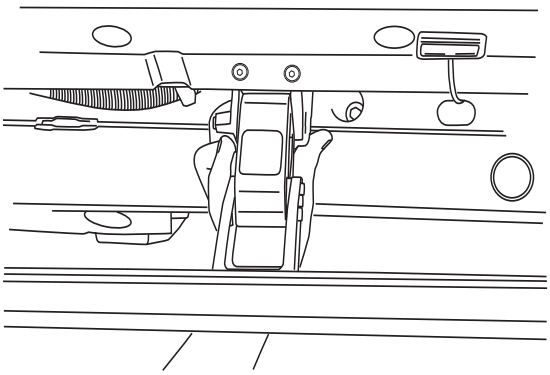

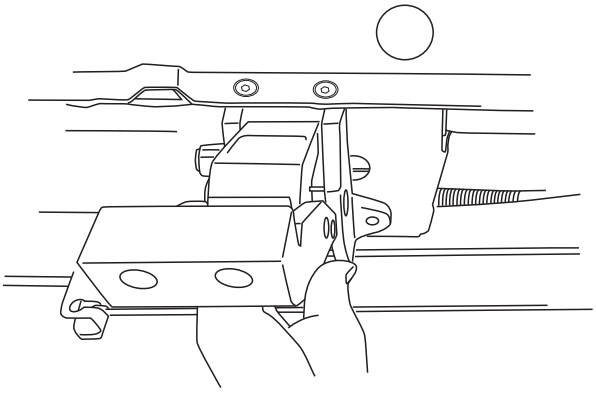

33

Reinstall fuse.

Check that all doors activate the Power Step and the LED Lights work when doors open and close. Reinstall any remaining trim panels.

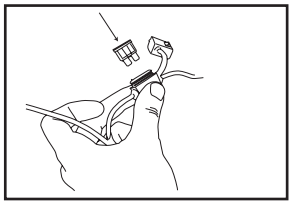

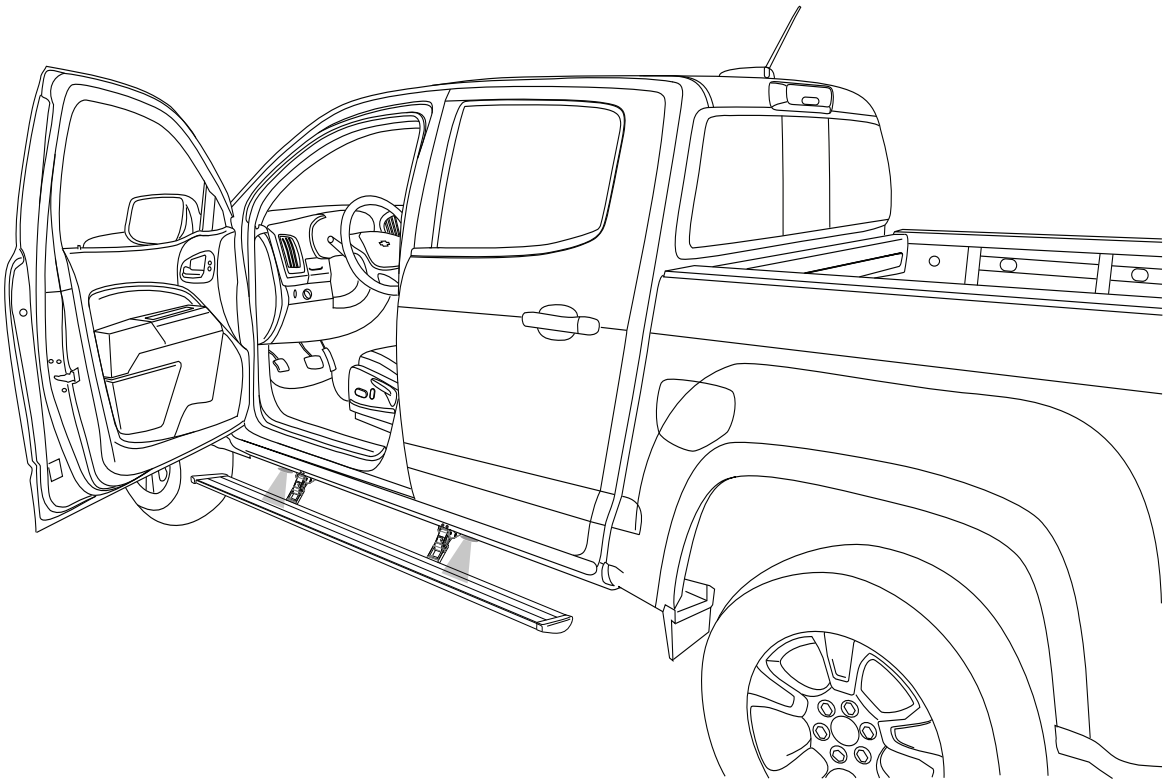

FINAL SYSTEM CHECK

Check that all doors activate the PowerStep and the LED lights work when doors open and close.

NORMAL OPERATION: When the doors open, PowerStep automatically deploys from under the vehicle. When the doors are closed, PowerStep will automatically return to the stowed/retracted position. ***Note that there is a 2-second delay before the PowerStep returns to the stowed/retracted position.***

CORRECT OPERATION OF LIGHTS: All four lamps will illuminate upon opening any door of vehicle. Lamps will stay on until restowing of both Power Steps or until 5 minutes has expired with the doors open. When the lights timeout after 5 minutes, they can be reillumintated by closing and opening any door of vehicle.

AMERICAN DESIGNED & ENGINEERED

Thank you for your recent RealTruck purchase.

REGISTER YOUR PRODUCT TODAY FOR FASTER SERVICE & PRODUCT UPDATES

Please visit:
https://realtruck.com/warranty-registration/
or scan the QR Code

SCAN ME

Product Registration Benefits:

• Ensure we have your purchase receipt and product info in our system which is required for warranty.

• Faster and easier access to customer service and tech support in the unlikely event you need warranty or product support.

• Registration helps us keep you up to date on product information and offers.

To view other RealTruck products that may be offered for your vehicle.

Please visit: www.realtruck.com

REALTRUCK AMP RESEARCH Power Step

Congratulations on your purchase of the genuine RealTruck / AMP Research PowerStep! Here's what you should know...

POWER-DEPLOYABLE RUNNING BOARDS OPERATION: RealTruck / AMP Research PowerStep running boards automatically move when the doors are opened to assist entering and exiting the vehicle.

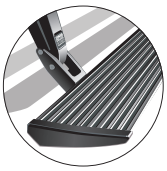

Automatic power deploy:
The running boards will extend down and out when the doors are opened.

Automatic power stow:
The running boards will return to the stowed position when the doors are closed. There will be a 2-second delay before the running boards move to the stowed position.

Automatic stop:
If an object is in the way of the moving running board, the running board will automatically stop. To reset, clear any obstruction, then simply open and close the door to resume normal operation.

Manually set in the deployed (OUT) position for access to the roof:
The running boards can be manually set in the deployed position by firmly holding the step down with your foot while at the same time closing the door. To resume normal operation, open and close the door.

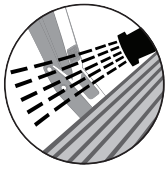

Maintenance: In adverse conditions, debris such as mud, dirt, and salt may become trapped in the running board mechanism, possibly leading to unwanted noise. If this occurs, manually set the running boards to the deployed position and flush the front and rear hinge arms with a high-pressure car wash wand. Avoid spraying the motors directly. After washing, apply silicone spray lubricant to the hinge pivot pins. Do not apply silicone, wax or protectants like Armor All® to the running board stepping surface.

Caution! Keep hands away when the running board is in motion.

5-YEAR LIMITED WARRANTY

RealTruck / AMP RESEARCH warrants this product to be free from defects in material and workmanship for FIVE (5) YEARS FROM DATE OF PURCHASE, provided there has been normal use and proper maintenance. This warranty applies to the original purchaser only. All remedies under this warranty are limited to the repair replacement of the product itself, or the repair or replacement of any component part thereof, found by the factory to be defective within the time period specified. The decision to repair or replace is wholly within the discretion of the manufacturer.

This warranty specifically excludes labor. If you have a warranty claim, first you must call our factory at the number below for instructions. You must retain proof of purchase and submit a copy with any items returned for warranty work. Upon completion of warranty work, if any, we will return the repaired or replaced item or items to you freight prepaid. Damage to our products caused by accidents, fire, vandalism, negligence, misinstallation, misuse, acts by nature or by defective parts not manufactured by us, is not covered under this warranty.

ANY IMPLIED WARRANTIES OF MERCHANTABILITY AND/OR FITNESS FOR A PARTICULAR PURPOSE CREATED HEREBY ARE LIMITED IN DURATION TO THE SAME DURATION AND SCOPE AS THE EXPRESS WRITTEN WARRANTY. OUR COMPANY SHALL NOT BE LIABLE FOR ANY INCIDENTAL OR CONSEQUENTIAL DAMAGE.

Some states do not allow limitations on how long an implied warranty lasts, or the exclusion or limitation of incidental or consequential damages, so the above limitations or exclusions may not apply to you. This warranty gives you specific legal rights, and you may also have other rights that vary from state to state.

FOR WARRANTY ISSUES WITH THIS PRODUCT PLEASE CALL REALTRUCK TECH SUPPORT 1-888-983-2204

WARNING

Be sure to read and precisely follow the provided instructions when installing this product. Failure to do so could place the vehicle occupants in a potentially dangerous situation. After installing or reinstalling, re-check to insure that the product is properly installed.

The material that your product is made from can be recycled. Please also consider recycling the packaging that your product came in.