Power Step

APPLICATION	MODEL YEAR	AMP Part #	
Chevrolet Silverado/ GMC Sierra - Crew Cab	2017 - 2019	76247-01A	(Diesel Only)
Chevrolet Silverado/ GMC Sierra - Double Cab	2017 - 2019	76247-01A	(Diesel Only)

** Modification required to running board assembly. See Item 1 on page 3.*

INSTALLATION GUIDE

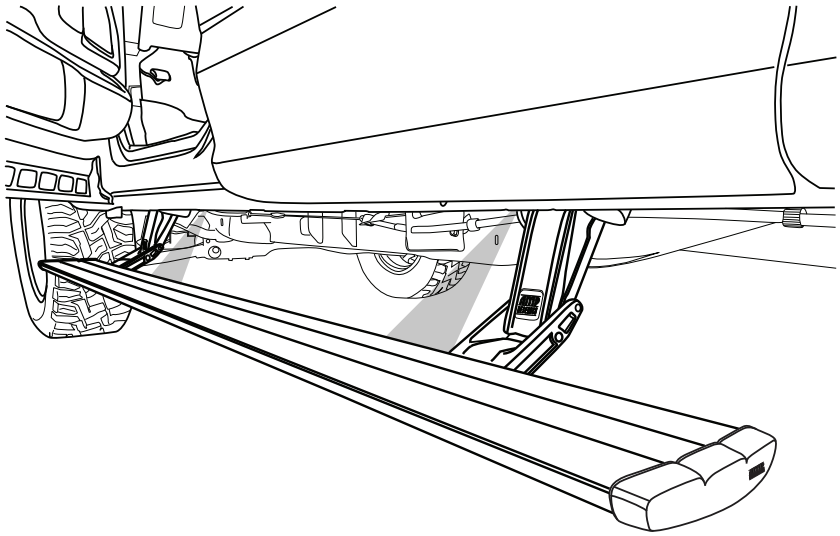

with NEW Brose 2 Motor Design

INSTALLATION TIME

3-5 Hours

Professional installation recommended

SKILL LEVEL

1 2 3 4

4= Experienced

TOOLS REQUIRED

- ❑ Safety goggles
- ❑ Measuring tape
- ❑ 10 mm socket
- ❑ 13 mm socket
- ❑ 5mm hex key wrench (allen wrench)
- ❑ Ratchet wrench and extension
- ❑ Wire crimpers
- ❑ Wire stripper / cutter
- ❑ 3/16” hex key wrench (allen wrench)
- ❑ 4mm hex key wrench (allen wrench)
- ❑ Electrical tape
- ❑ Weather proof caulking (silicone sealer)
- ❑ Silicone spray
- ❑ Torx T-25 driver

WARRANTY

5-Year Limited Warranty

REALTRUCK TECH SUPPORT 1-888-983-2204 (Press 2) Monday - Friday, 8:00 AM - 5:00 PM EST

Designed and manufactured by RealTruck AMP Research® • Made in Mexico
Patent Protected. Please see our product site for applicable patents. www.realtruck.com/b/amp-research/
© RealTruck Group, Inc., 2025 • Five-year limited warranty. • Professional installation is recommended.

INSTALLATION GUIDE

Attaching motor to Linkage assembly.

Motor must be installed onto linkage assembly before mounting to vehicle.

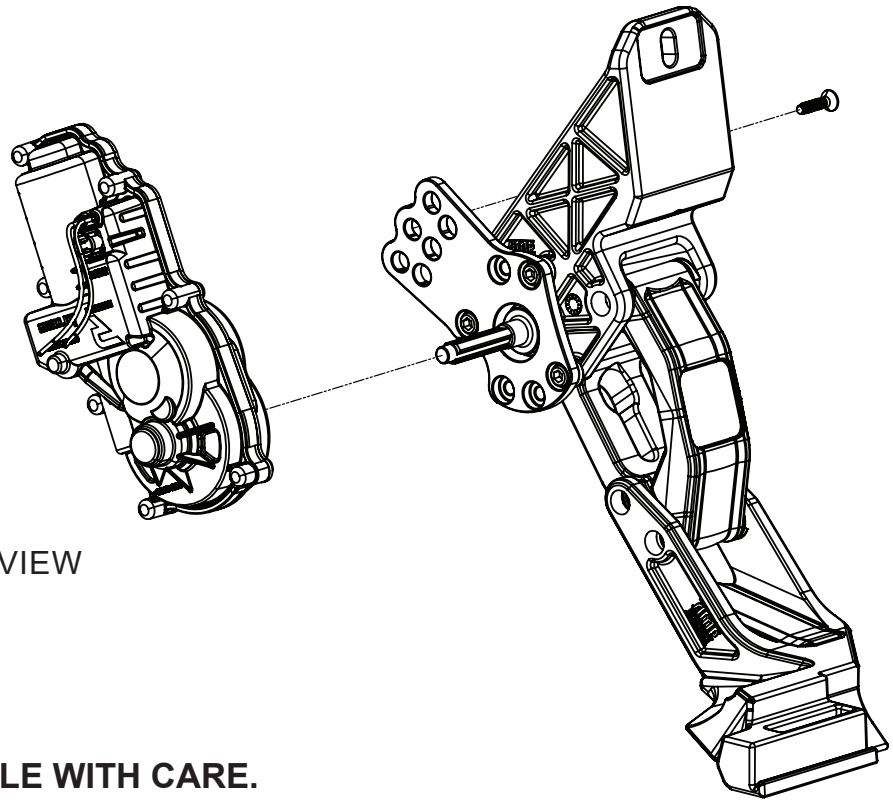

EXPLODED VIEW

- Motor
- Fastener

CAUTION: HANDLE WITH CARE.

To ensure our customers receive all components with full integrity, we pack the motors separate from their Linkage assemblies. This requires that the installer position and fasten the motor before continuing with the install. Please follow the instructions below and handle the assembly carefully.

CAUTION: Dropping the assembly or any excessive impact MAY cause damage to the motor.

Instructions:
1. Slide motor on to drive shaft.
2. Rotate motor by hand while on the shaft to postion it to the mounting plate (orientation as shown above).
3. Fasten motor to the motor mounting plate using supplied PT Screw with T-25 Torx driver. Tighten screw to 60 in-lbs (6.8 N·m). **Do not over torque.**

Note:
The motor and shaft have only three possible positions. Depending on the current position of the motor, motor/shaft and the orientation of the motor plate, it may be necessary to power it in order to align it correctly with the linkage and shaft during assembly so that the motor can be mounted to the mounting plate.
To do this:

1. Power up the motor.
2. Open the door to allow the motor to spin and reposition.
3. Once the motor times out, remove the fuse.
4. Assemble the motor onto the shaft.
5. Fasten motor to mounting plate.

This process may need to be repeated to achieve the correct alignment.

PARTS LIST AND HARDWARE IDENTIFICATION

Note: Some Applications require modification.

Application	Cut Length
Crew Cab	85” (No Modification Required)
Extended Cab	79” (Trim 6” off of Board)

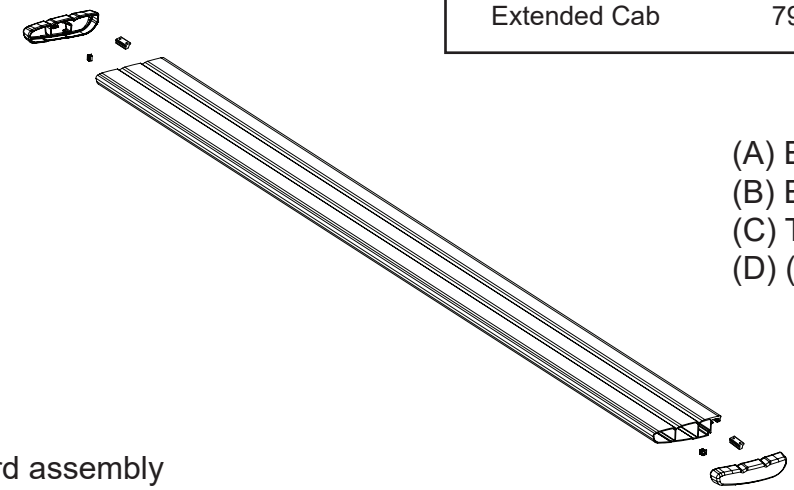

(A) End cap left (x1)
(B) End cap right (x1)
(C) T-nut insert (x2)
(D) (S) Style clips (x2)

1 x2
Running Board assembly

Note: The jogs in the lower part of the linkages point the same direction on each side. Always to the Rear of the truck.

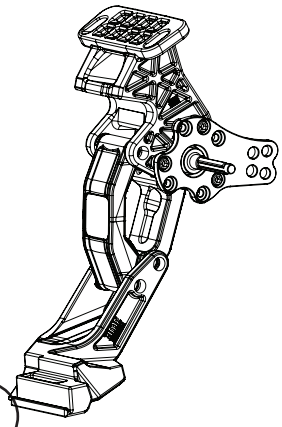

2
Front Driver side motor Linkage

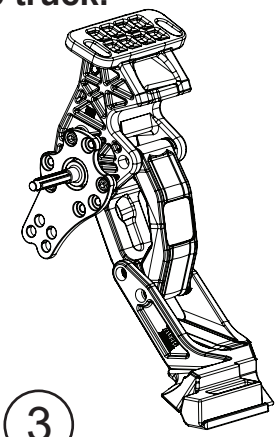

3
Front Passenger side motor linkage

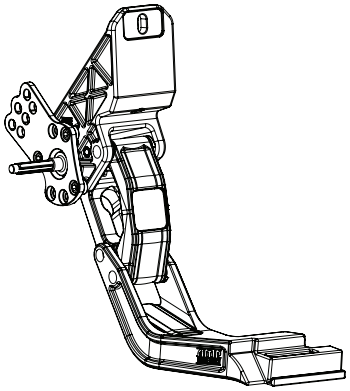

4 x2
Rear Driver side motor linkage

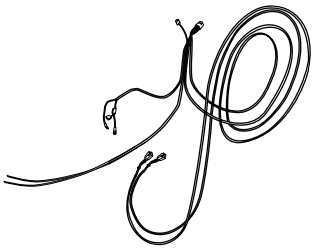

6
Wire harness

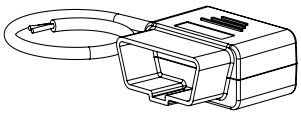

7
OBD II Plug

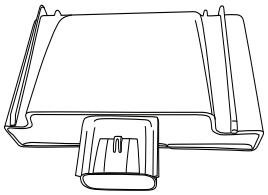

8
Controller SSA

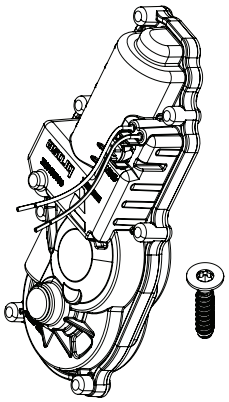

9 x4
Motor Assembly kit

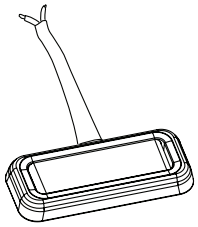

9 x4
LED Lamp

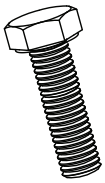

10 x3
Hex Bolt

11 x3
Washer

12 x2
U-nut

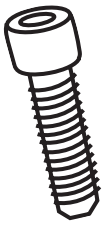

13 x8
Socket Cap Screw

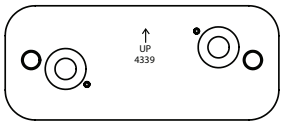

14 x2
Mounting Bracket

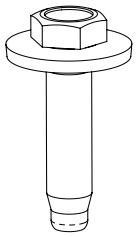

15 x4
Conical Washer Bolt

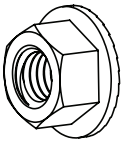

16 x4
Flange Nut

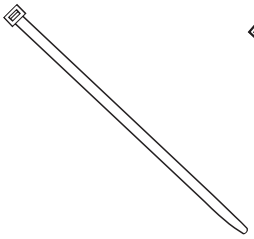

17 x20
Cable tie (7”)

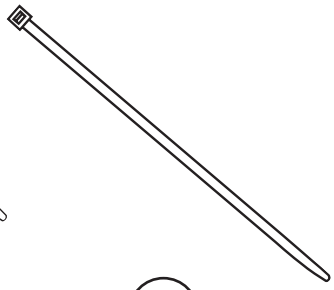

18 x2
Cable tie (11”)

19
Posi-Lock™

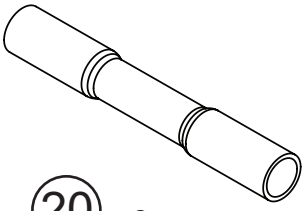

20 x8
Butt Connector

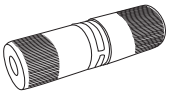

21 x8
Posi-Tite®

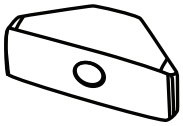

22 x2
Mounting Insert

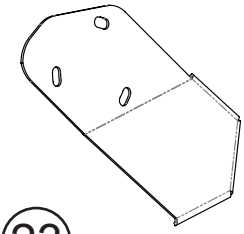

23 x2
Shield

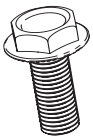

24 x6
Hex Flange Bolt

25
Grommet

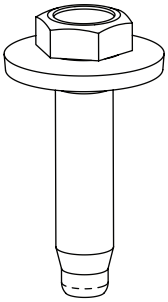

26 x2
Long Conical Washer Bolt

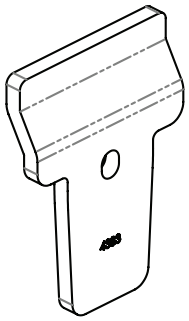

27 x2
Rear Bracket

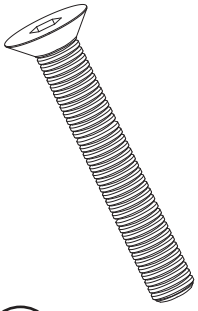

28 x2
Countersunk Bolt

FENDER TRIM PROCEDURE - CHEVROLET SILVERADO

Steps 1-6 are for Chevy Silverado Fender trimming. See Steps 7-9 for GMC Sierra Fender trimming

On Silverado model trucks trimming is required on the front fender trim. Passenger side shown.

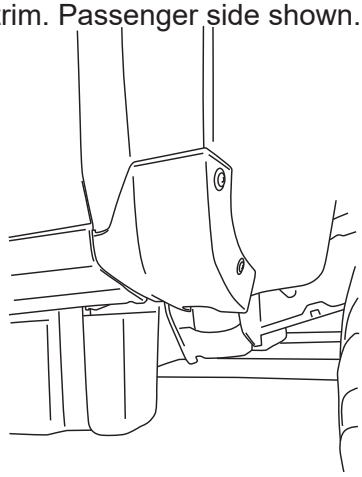

1

Using a T10 Torx bit remove two screws holding fender trim to fender.

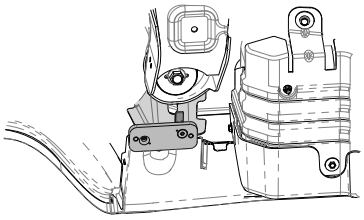

2

Once 2 screws are removed shift fender trim towards the rear of the vehicle to disengage plastic tabs.

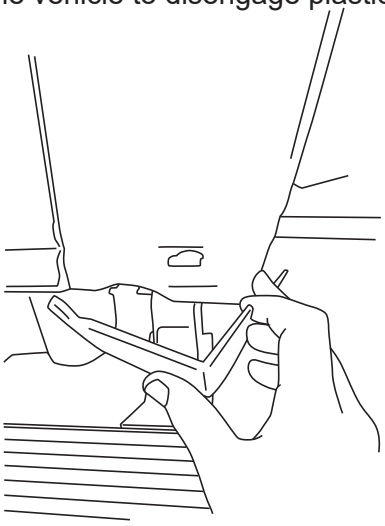

3

Print and cut out templates at the back of install sheet for the Chevy Silverado. **Note: Make sure to verify the printed sheet is the correct size.** Using tape line up template as show. The main edge should be lined up with the feature line in the middle of the part.

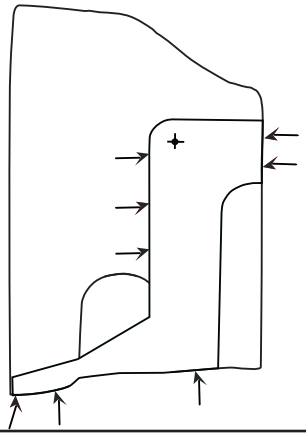

4

At center point use a 1” hole saw. Once drilled we recommend using a band saw to trim the straight edges. Once trimmed deburr and reinstall fender trim.

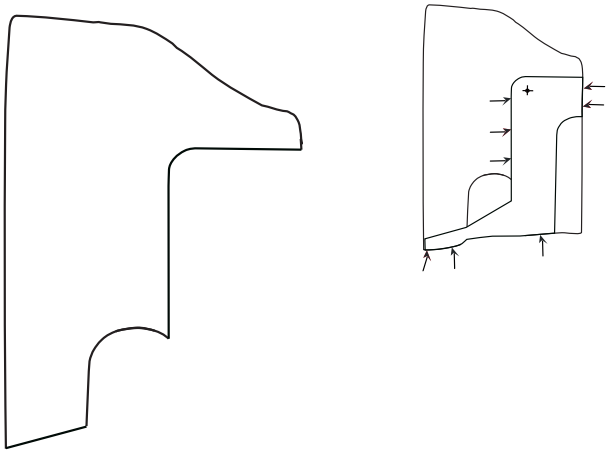

5

Repeat on the Driver Side. Reinstall fender trim and continue with powerstep installation.

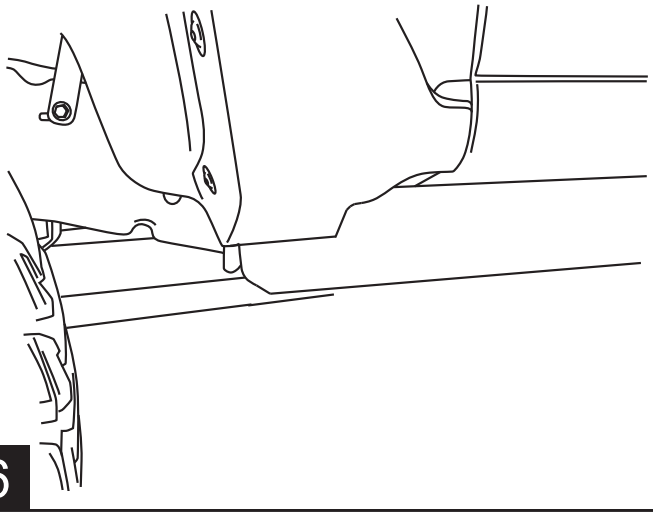

6

FENDER TRIM PROCEDURE - GMC SIERRA

Steps 7-9 are for GMC Sierra Fender trimming

Before removing the fender bolt mark fender trim as shown below. The front face should not be cut, this leaves a factory appearance from the outside.

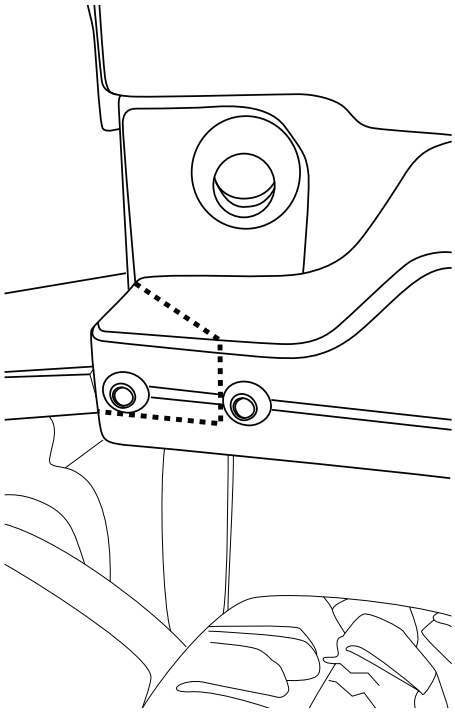

7

Using a hack saw or dremel tool, cut along lines made. Be careful not to damage the pinchweld behind the trim piece. Once trimmed debur the edge.

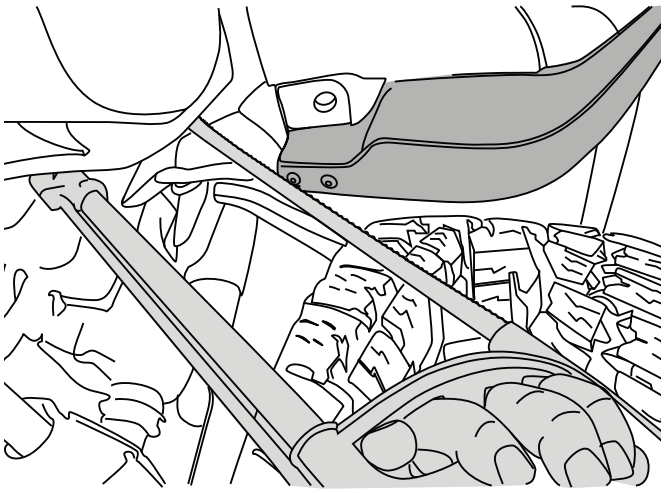

8

The end result should look like this below. Repeat on the other side trim piece. Continue with powerstep installation.

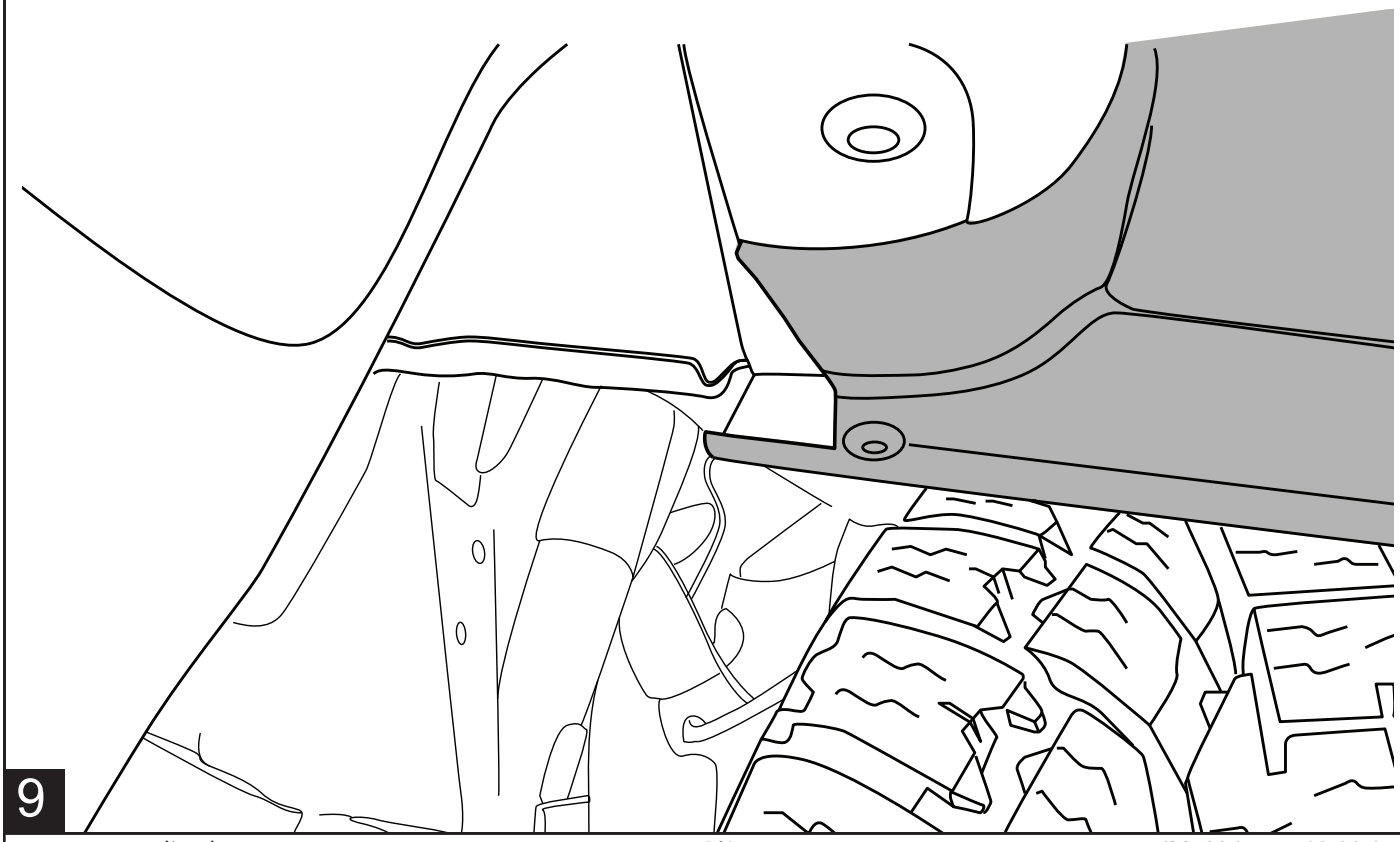

9

Installing Front Linkage (Passenger Side)

Remove Passenger side Fender bolt and U-nut using a 13mm socket or wrench. Install Mounting Bracket (14) to slot in Body support rib using supplied bolt (28) and mounting insert (22). Rotate mounting insert into slot and snug bolt. Orient bracket as shown.

Install linkage (3) into position pulling forward on inner fender liner. Rotate linkage into position to check alignment of linkage to mounting plate. First install the lower fender conical washer bolt (15) and nut (16). Next install upper mounting bolt and washer (10,11) into forward mounting hole to verify mounting plate alignment. Adjust as needed. Remove linkage, torque mounting plate bolt (28) to 10 ft-lbs using 5mm hex key. Reinstall linkage. Now remove linkage and tighten Bolt (28) to hold the mounting bracket (14) in place correctly. Now reinstall the linkage. **Finger tighten only!**

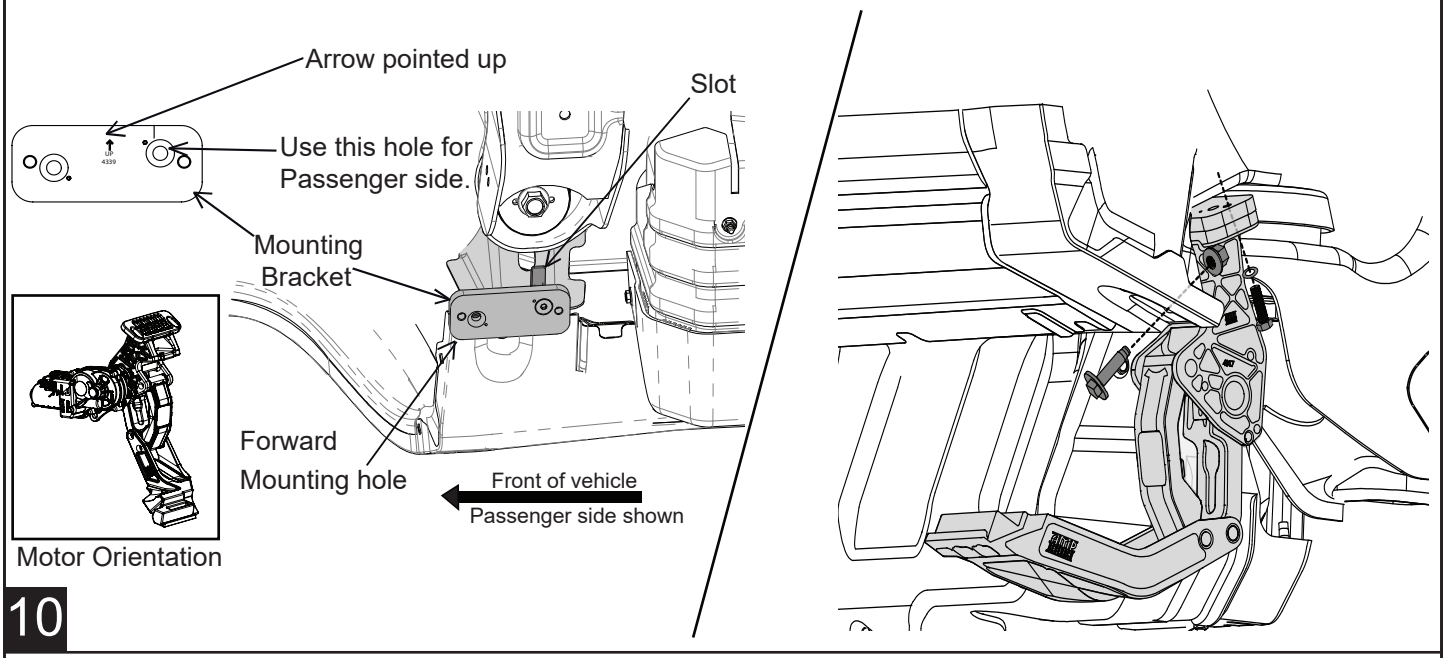

10

This is how the front passenger side linkage should look when installed. The Shield (23) should be installed as shown below, marked ‘P’ for passenger and ‘D’ for driver side, use 3 bolts (24) per side of the vehicle. The shield should be rotated counterclockwise, then **tightened to 4 ft-lbs.**

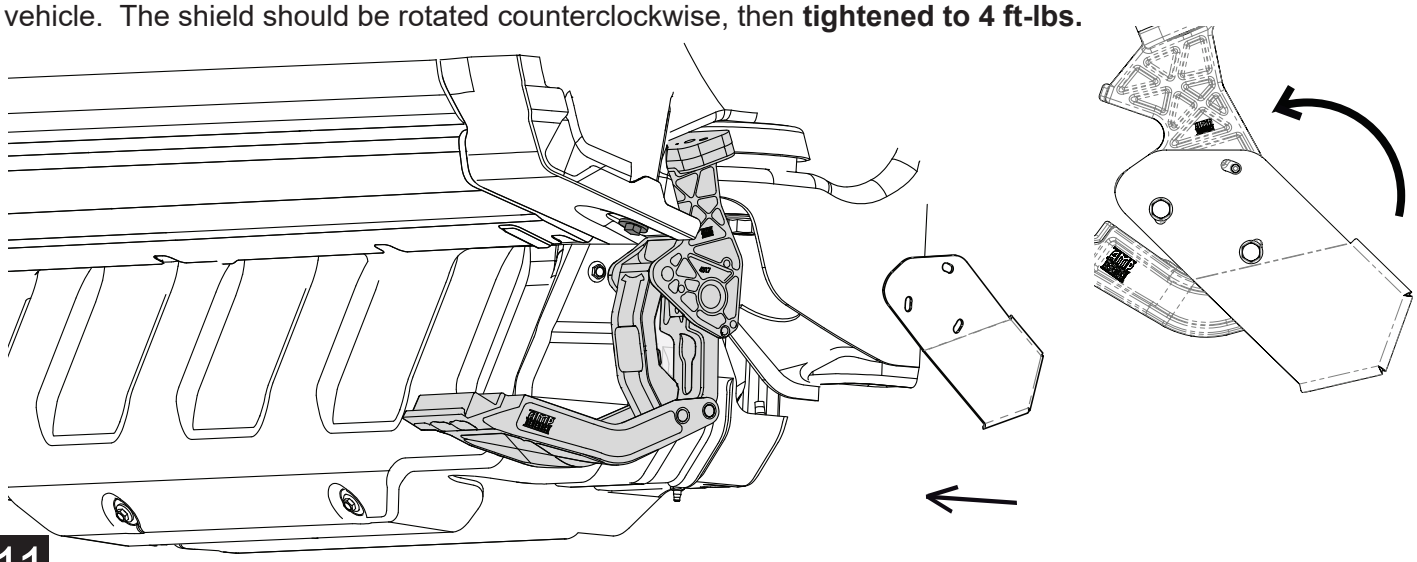

11

Installing Front Linkage (Driver Side)

Remove Driver side Fender bolt and U-nut. Install the driver side linkage the same as the Passenger side using the other mounting bracket hole. Use two upper bolts and washers (10 & 11). The motor can be installed on the linkage after it is installed since there is more room. Follow the torque sequence in the next page, step 16. Install shield (23) and rotate counter-clockwise.

On GMC's the Mounting Insert may need to be tapped in to fit on the Driver's side.

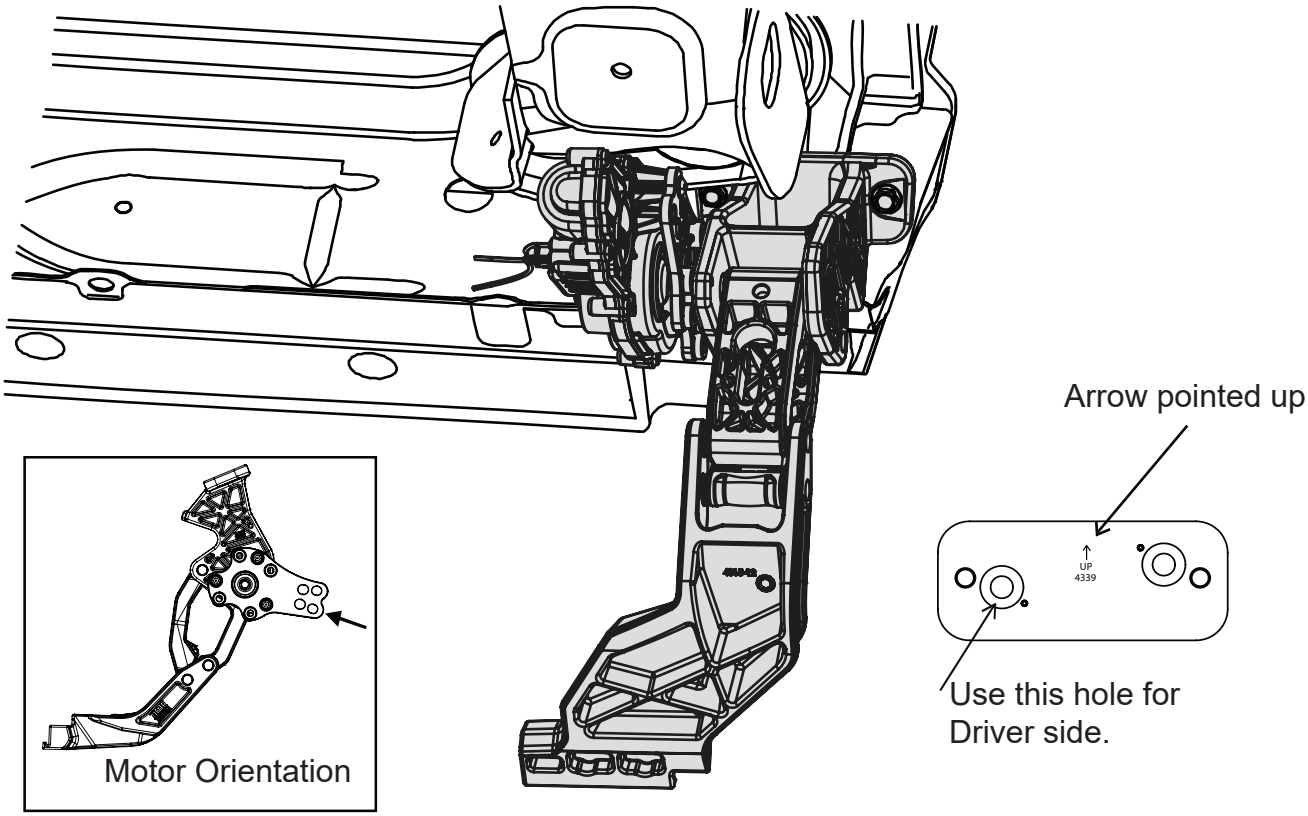

12

Installing Linkages

Install Passenger and Driver side Rear Motor Linkages in the fourth sheetmetal tab/hole from front. Extra Cab: See measurements below for location. Install U-nut (12). Follow the torque sequence in step 16. Both linkage lower mounts face to the rear of vehicle.

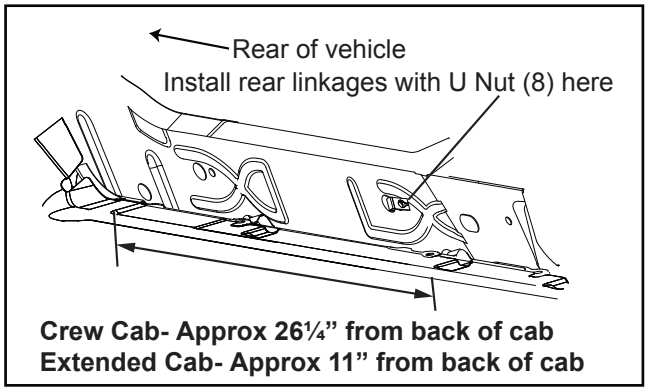

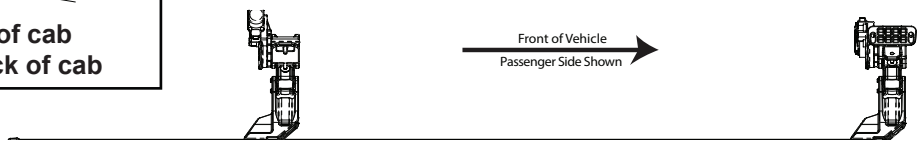

13

Install linkage. Finger tighten bolt.

Install bolt and bracket (26 & 27) at top, and bolt and nut (15&16) to the pinchweld, finger tighten only.

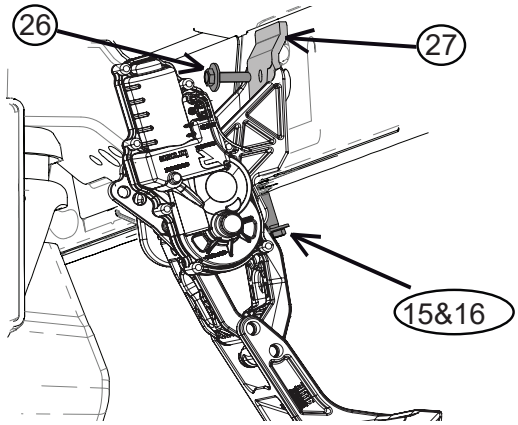

14

Slide mounting T-nut into position, slide the board (1) back so that the front end cap is against the front Linkage as shown.

Install two Socket cap screws (13), finger tighten only. Repeat on rear linkage.

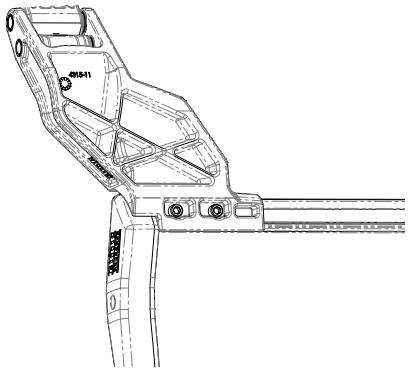

15

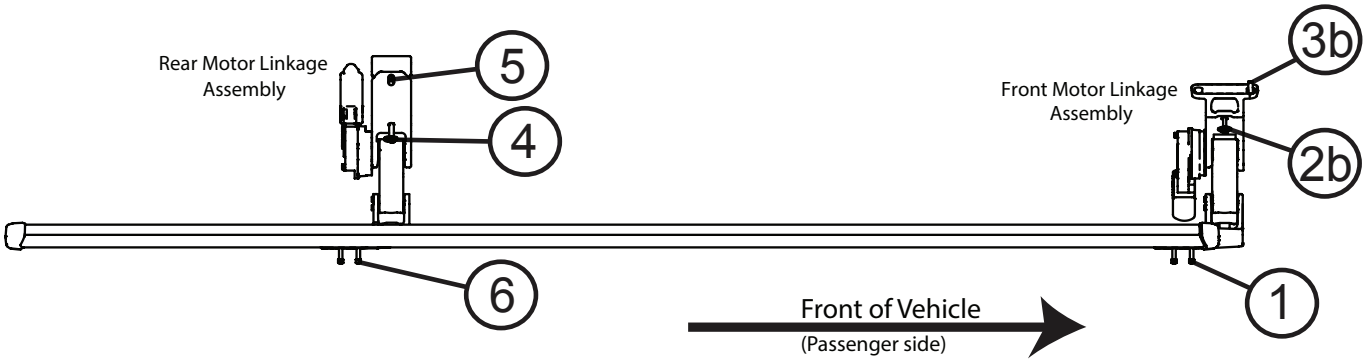

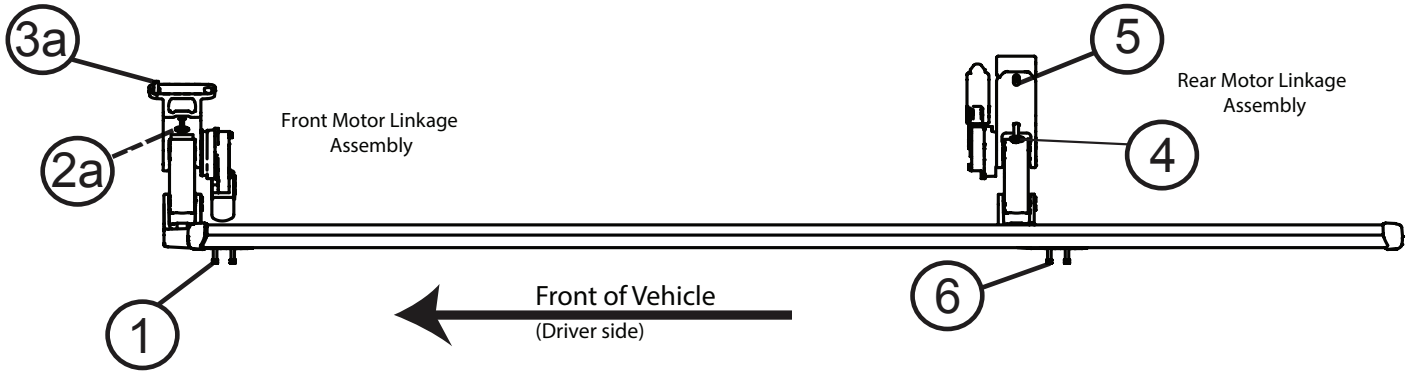

In order to prevent any binding follow the torqueing order listed above.

1) Torque Socket cap screws to 10 ft-lbs.
2) Torque Hex head screw to 16 ft-lbs.
3) Torque mounting bracket bolts mount bolt to 10 ft-lbs.
4) Torque Hex head screw to 16 ft-lbs.
5) Torque Hex head screw to 16ft-lbs.
6) Torque Socket cap screws to 10 ft-lbs.

16

Remove fuse from wire harness.
Using the two 11” cable ties (18), mount controller (9) to the harness next to the battery. Attach power lead (RED wire) to positive pole on the battery and Negative lead (BLACK wire) to negative pole on the battery.
CAUTION: Do not ground wrench when engaged with nut.

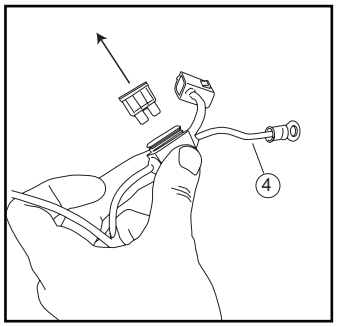

Plug in wire harness.
(Ensure that locking tabs engage.)

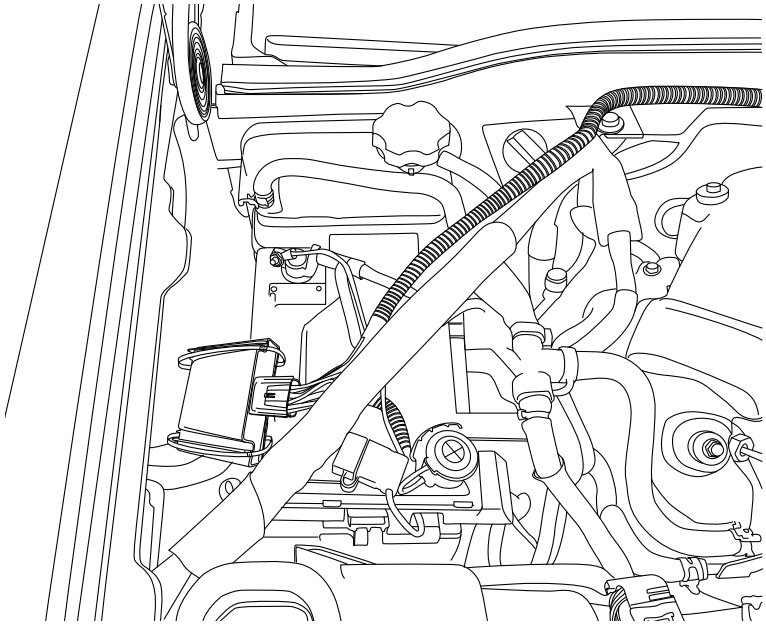

17

Route long end of wire harness above engine and down through drivers side wheel well.
Zip tie (17) harness (6) to cowling clips on fire wall. Route short end down passengers side. Secure with zip ties.
Next, wire motors to harness using instructions in step 19.
- Use method A for front driver side, and method B for rear driver side.
- Use method A for both passenger front and rear motors.

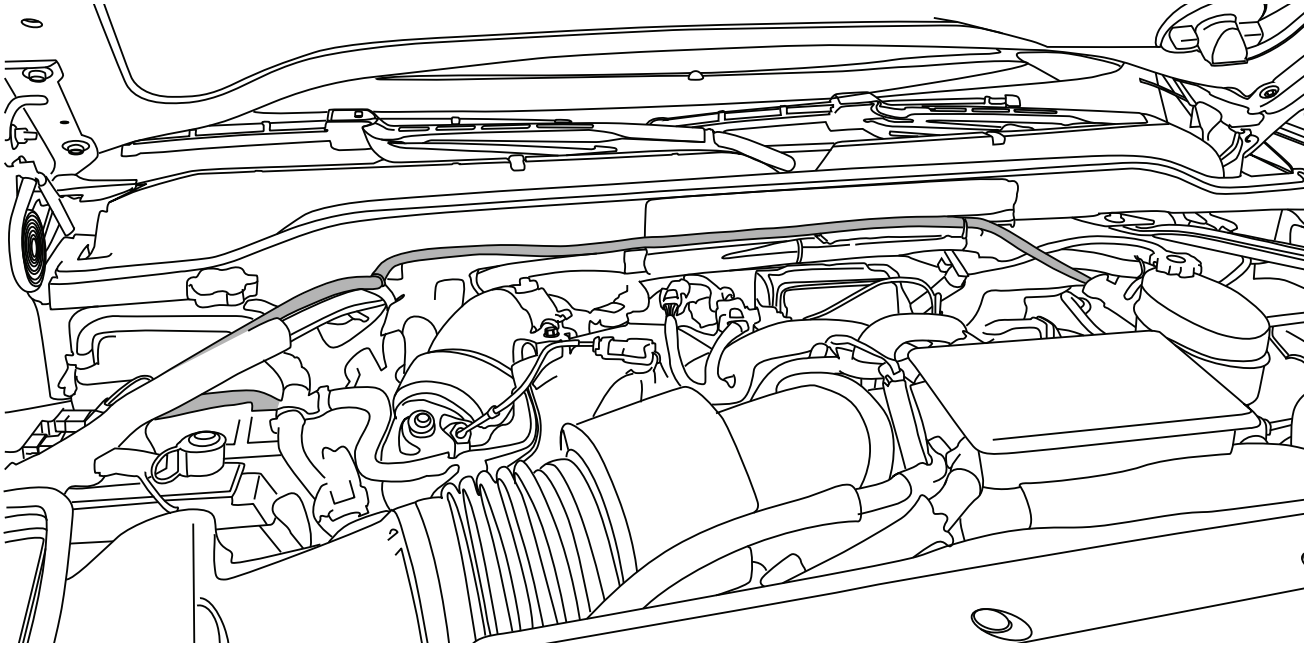

18

Before proceeding, see spin direction of the each motor than proceed with step A or B below.

A. Motor spinning the shaft clockwise direction:

1) First, install one Posi-Tite® (21) onto black wire from the motor. See image on right.

2) Install second Posi-Tite® (21) onto red with purple stripe wire from motor. See image on right.

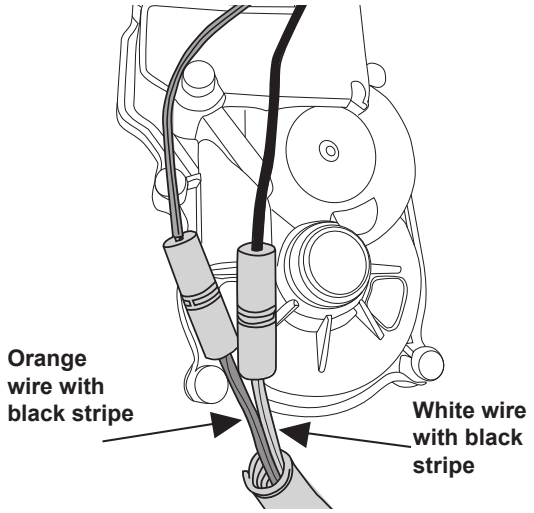

3) Next, connect the white wire with black stripe from the wire harness to the other end of the Posi-Tite® (21) that is connected to the all black wire from first step above.

4) Connect the Posi-Tite® (21) the red with purple stripe wire from the motor with the orange with black stripe wire from the harness.

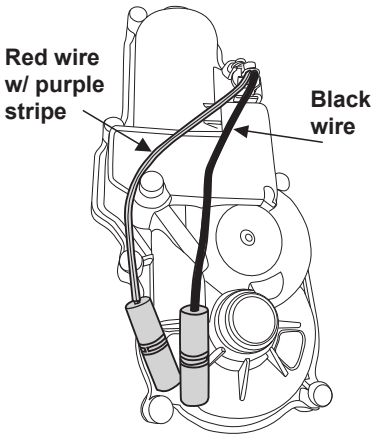

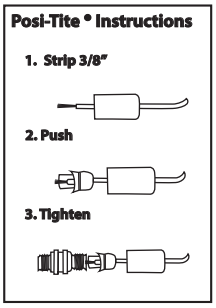

B. Motor spinning the shaft counter clockwise direction:

1) First, install one Posi-Tite® (21) onto black wire from the motor. See image on right.

2) Install second Posi-Tite® (21) onto Red wire with purple stripe from motor. See image on right.

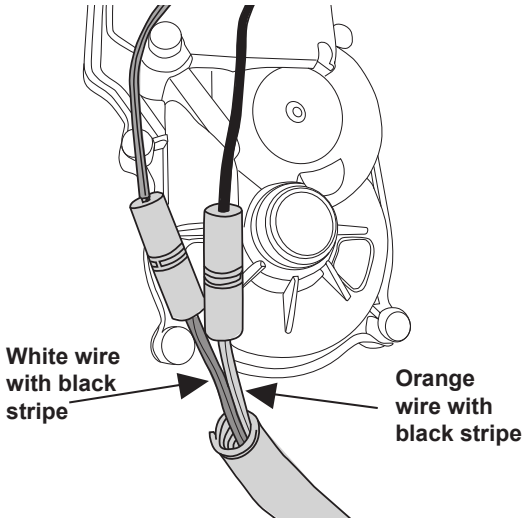

3) Next, connect the orange wire with black stripe from the wire harness to the other end of the Posi-Tite® (21) that is connected to the all black wire from first step above.

4) Connect the Posi-Tite® (21) the red wire with purple stripe from the motor with the white with black stripe wire from the harness.

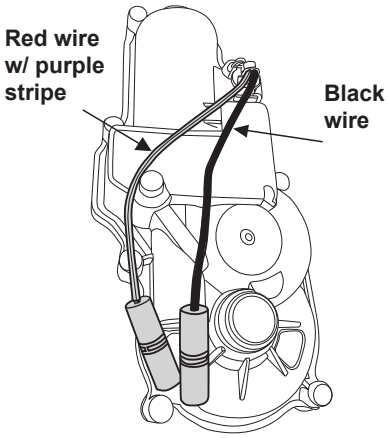

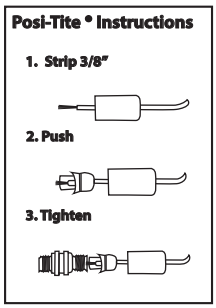

Route wire harness along the frame and back towards rear linkage.

Secure with zip ties (17).

Poke hole through rubber grommet near front door on underside of floor panel with small phillips screwdriver.

Push both wires through hole.

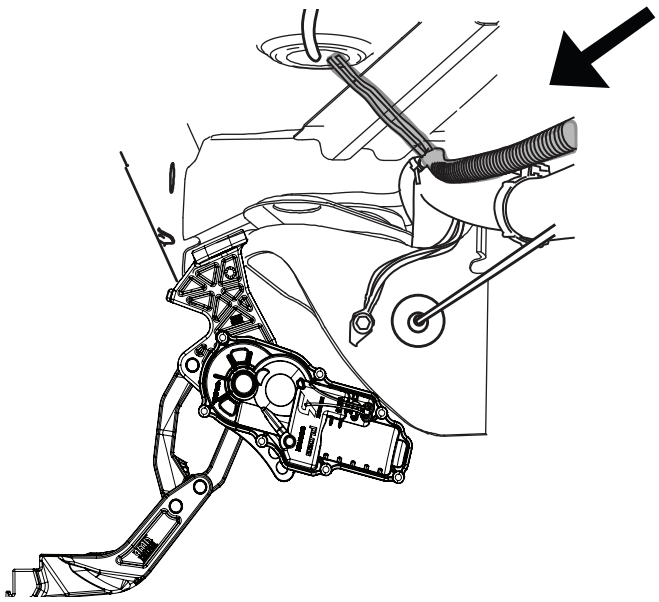

20

Pull up front door sill plate covers as shown.

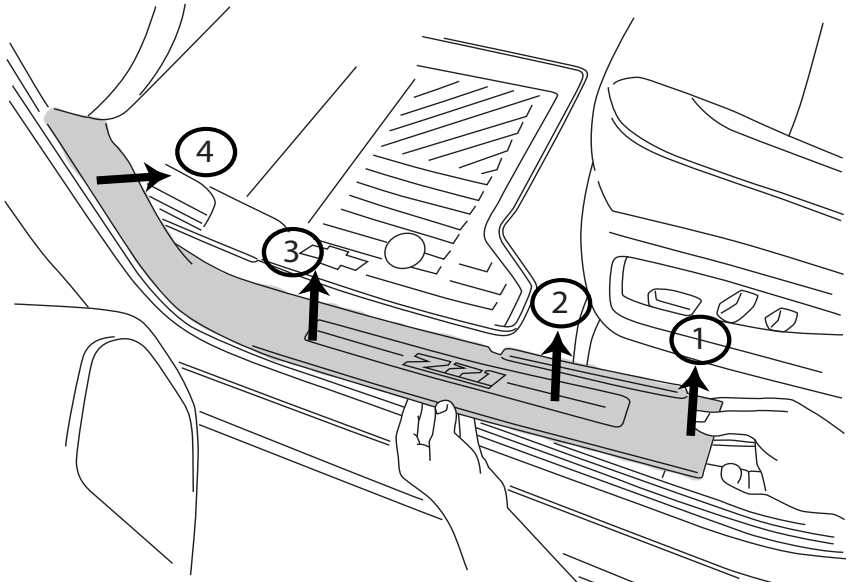

21

Pull up the carpet and thread both wires through the floor panel.

Seal holes with silicone glue and cover with tape so carpet does not stick to glue.

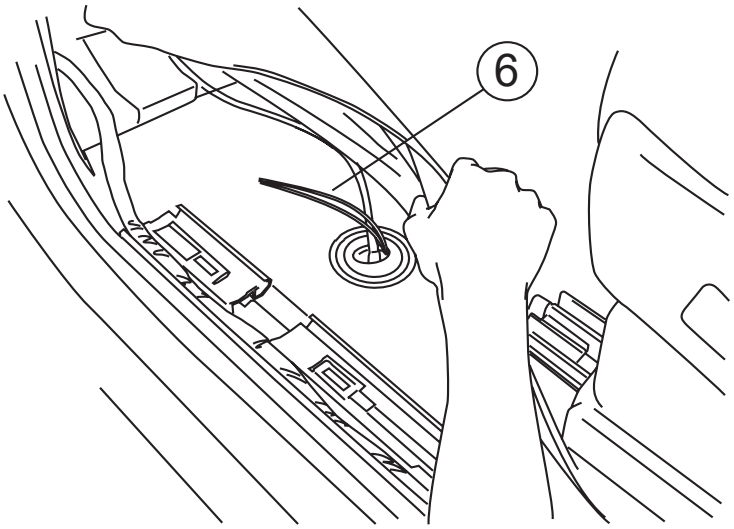

22

On each side of the vehicle measure from the front edge of door line on the pinch weld to the specified lengths below. Measure at 22” for front LED Light and 65” for rear LED Light.

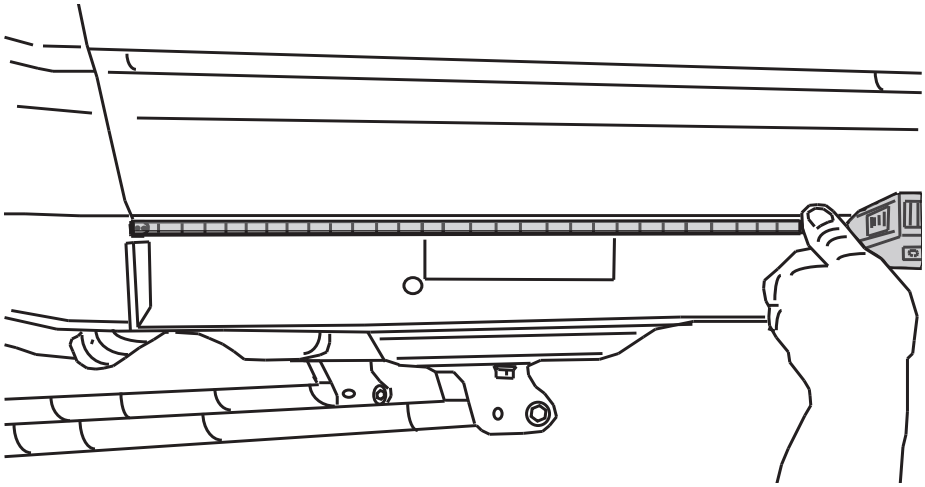

23

Affix lamp to rocker panel surface. Make sure the lamp is affixed to a clean, flat surface. There is a step down midway across the surface. Affix lamp just outside of step down.

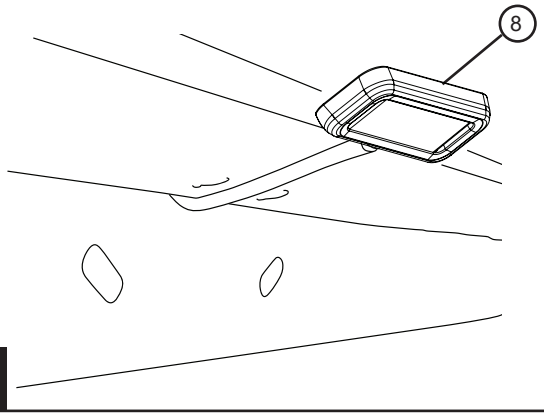

24

Using supplied butt connectors, connect the lamp wires. Red to Red, Black to Black.Once Crimped use heat gun to shrink tube.

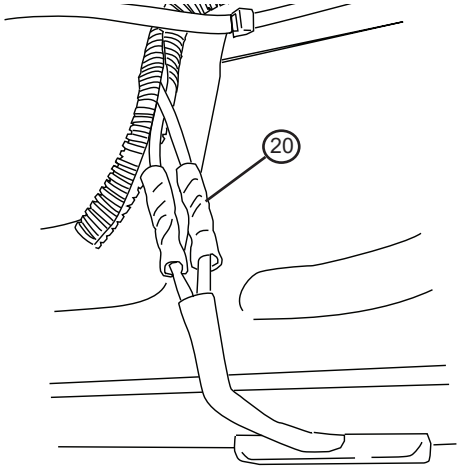

25

Close and wrap with conduit and electrical tape. Secure all loose wires with cable ties, with lamp wires pulled upward to avoid any wire snagging.

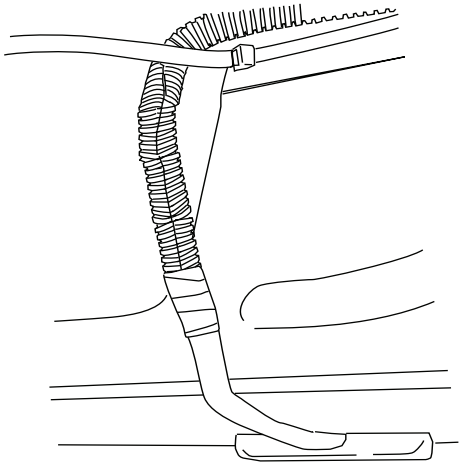

26

Reinstall fuse.

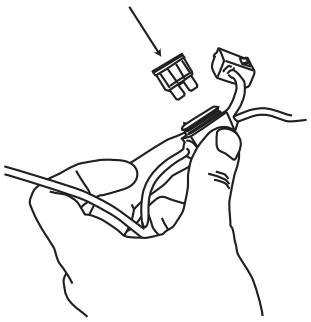

27

OBD II install: Use Supplied Posi Lock connector to attach the Plug and Play Module (7) to the Harness. Attach matching colors on the harness to the wires on the module. Plug in module to OBD II port on the vehicle. Secure harness with supplied tie wraps.

Note: If the OBD II pass thru harness (76404-01A) was purchased see install sheet supplied in packaging. The pass through harness allows for an open port for other accessories. See below for a brief description.

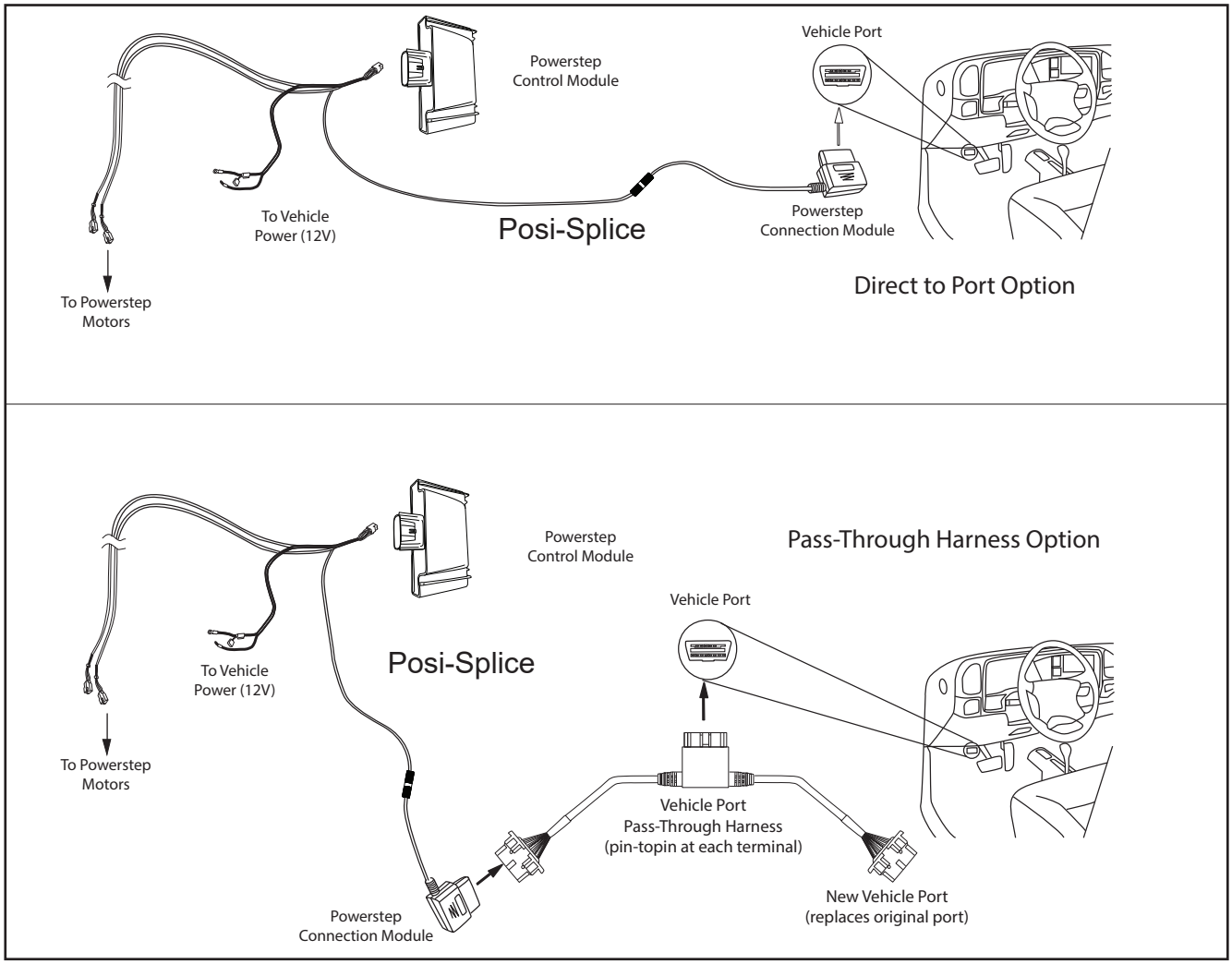

Wire OBD II connector with Posi-Lock™ (19).

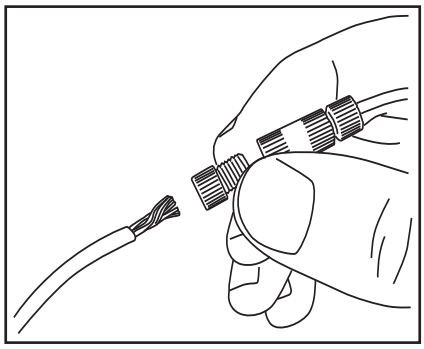

OBD II Connector located below steering column.

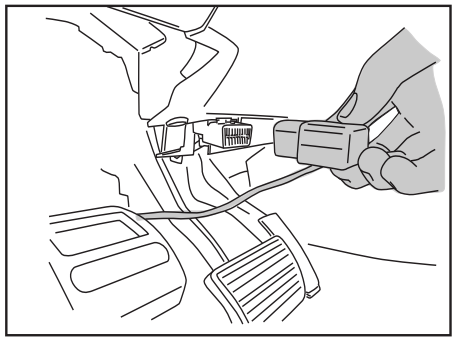

Check that all doors activate the Power Step and the LED Lights work when doors open and close. Reinstall any remaining trim panels.

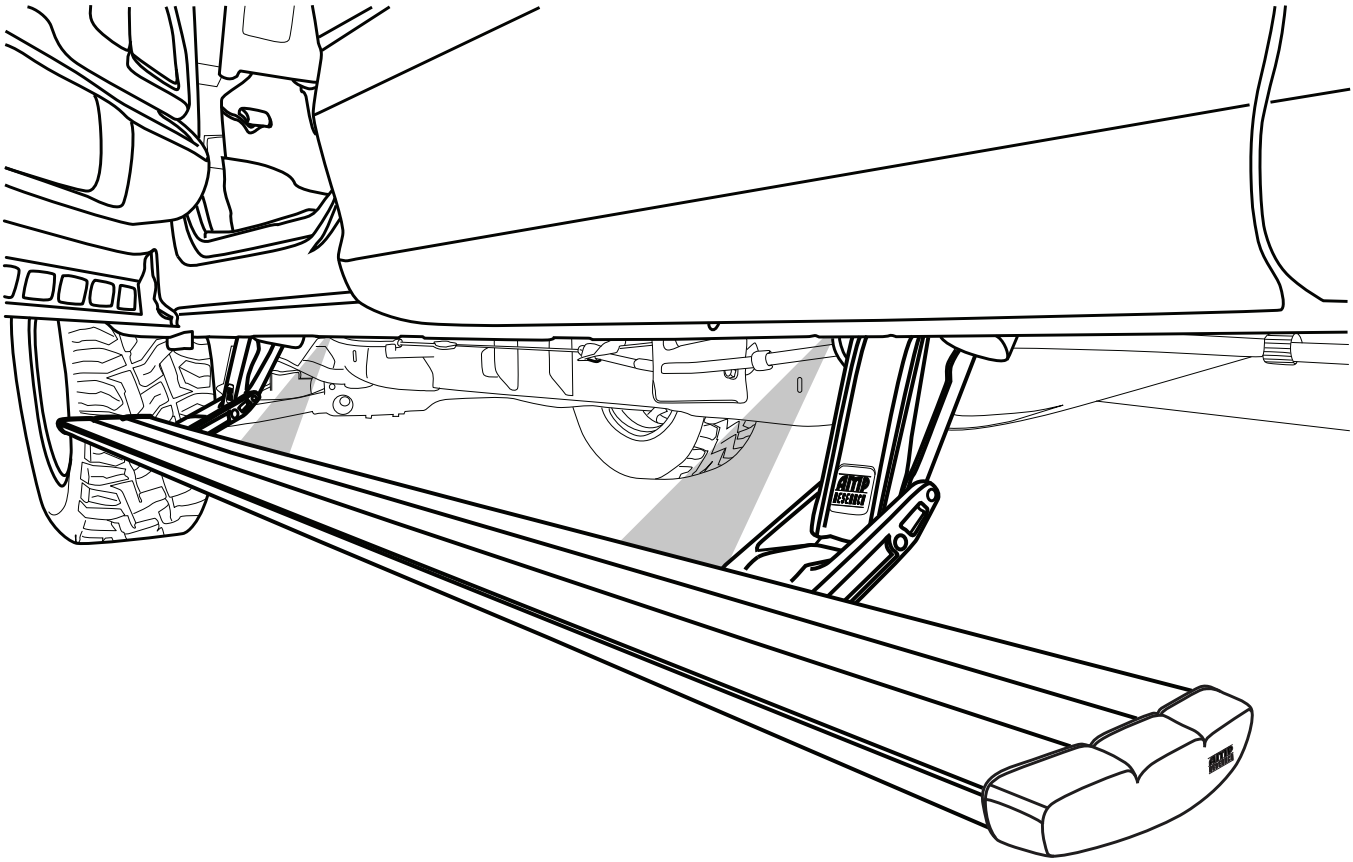

FINAL SYSTEM CHECK

Check that all doors activate the PowerStep and the LED lights work when doors open and close.

NORMAL OPERATION: When the doors open, PowerStep automatically deploys from under the vehicle. When the doors are closed, PowerStep will automatically return to the stowed/retracted position. ***Note that there is a 2-second delay before the PowerStep returns to the stowed/retracted position.***

CORRECT OPERATION OF LIGHTS: All four lamps will illuminate upon opening any door of vehicle. Lamps will stay on until restowing of both Power Steps or until 5 minutes has expired with the doors open. When the lights timeout after 5 minutes, they can be reillumintated by closing and opening any door of vehicle.

Silverado Driver Side Trim Template. **Print and make verify dimensions of template size are correct.**

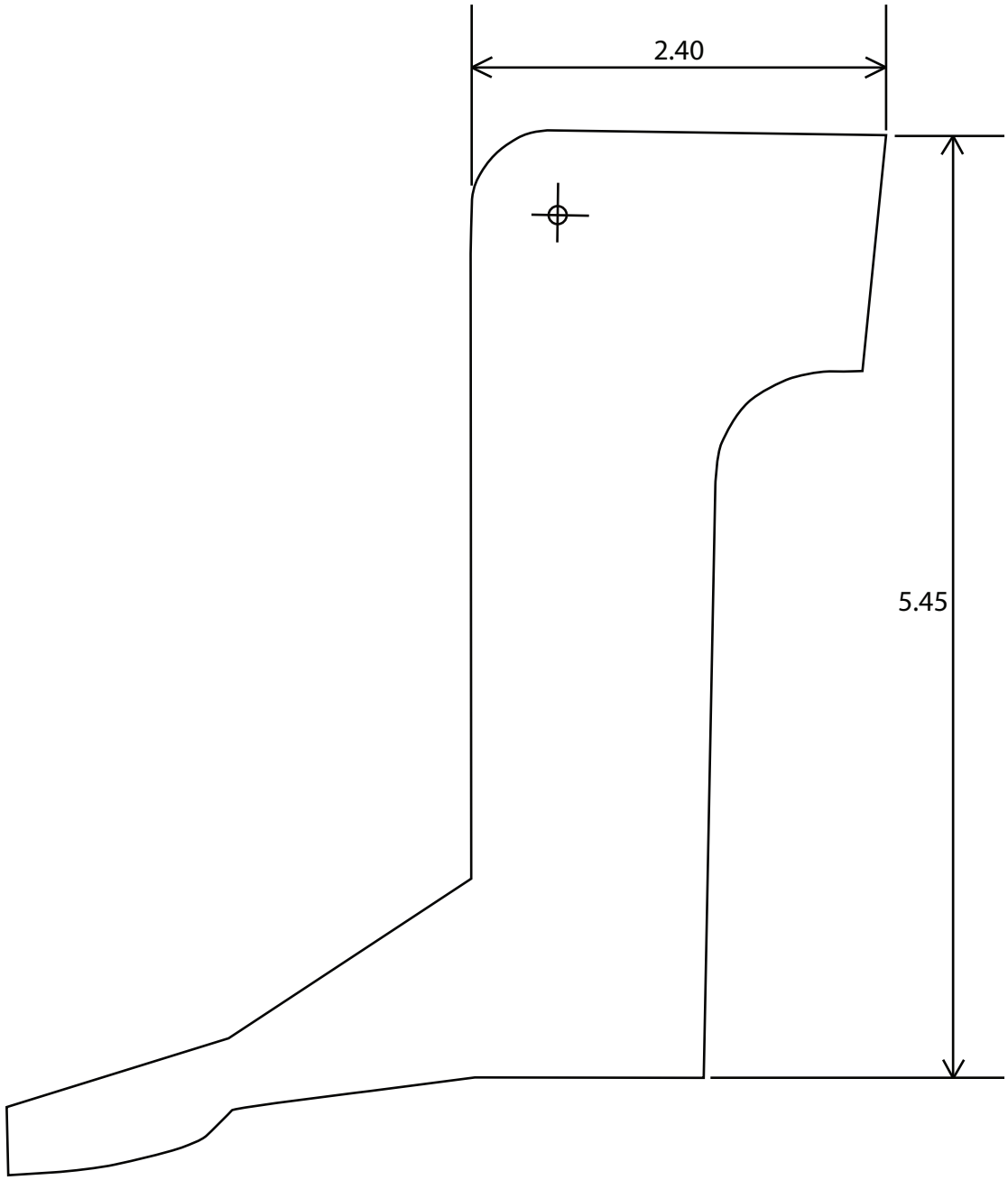

Silverado Passenger Side Trim Template.

Print and make verify dimensions of template size are correct.

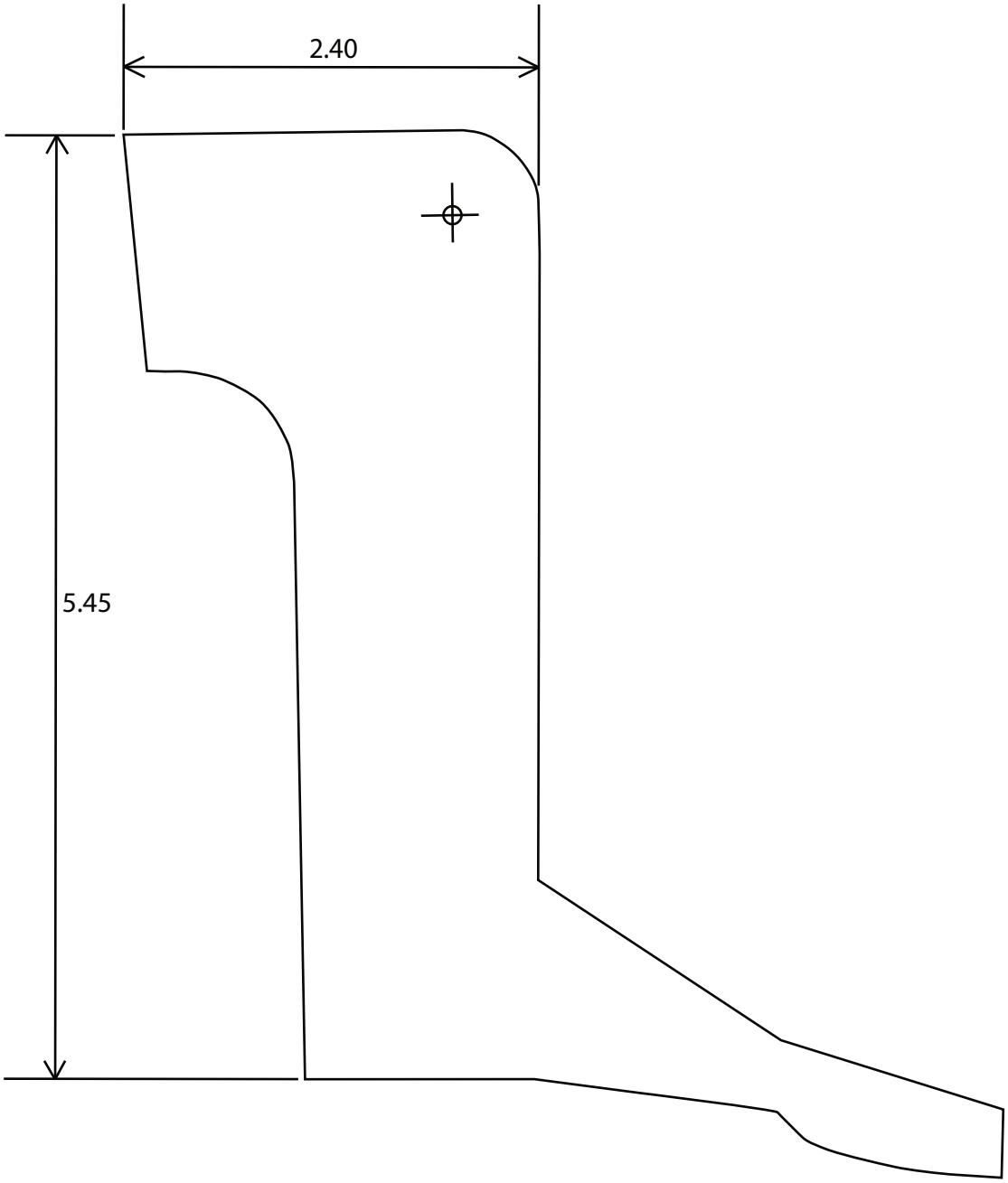

AMERICAN DESIGNED & ENGINEERED

Thank you for your recent RealTruck purchase.

REGISTER YOUR PRODUCT TODAY FOR FASTER SERVICE & PRODUCT UPDATES

Please visit:
https://realtruck.com/warranty-registration/
or scan the QR Code

SCAN ME

Product Registration Benefits:

• Ensure we have your purchase receipt and product info in our system which is required for warranty.

• Faster and easier access to customer service and tech support in the unlikely event you need warranty or product support.

• Registration helps us keep you up to date on product information and offers.

To view other RealTruck products that may be offered for your vehicle.

Please visit: www.realtruck.com

REALTRUCK AMP RESEARCH Power Step

Congratulations on your purchase of the genuine RealTruck / AMP Research PowerStep! Here's what you should know...

POWER-DEPLOYABLE RUNNING BOARDS OPERATION: RealTruck / AMP Research PowerStep running boards automatically move when the doors are opened to assist entering and exiting the vehicle.

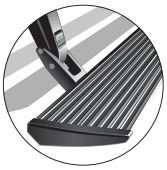

Automatic power deploy:
The running boards will extend down and out when the doors are opened.

Automatic power stow:
The running boards will return to the stowed position when the doors are closed. There will be a 2-second delay before the running boards move to the stowed position.

Automatic stop:
If an object is in the way of the moving running board, the running board will automatically stop. To reset, clear any obstruction, then simply open and close the door to resume normal operation.

Manually set in the deployed (OUT) position for access to the roof:
The running boards can be manually set in the deployed position by firmly holding the step down with your foot while at the same time closing the door. To resume normal operation, open and close the door.

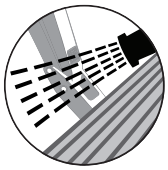

Maintenance: In adverse conditions, debris such as mud, dirt, and salt may become trapped in the running board mechanism, possibly leading to unwanted noise. If this occurs, manually set the running boards to the deployed position and flush the front and rear hinge arms with a high-pressure car wash wand. Avoid spraying the motors directly. After washing, apply silicone spray lubricant to the hinge pivot pins. Do not apply silicone, wax or protectants like Armor All® to the running board stepping surface.

Caution! Keep hands away when the running board is in motion.

5-YEAR LIMITED WARRANTY

RealTruck / AMP RESEARCH warrants this product to be free from defects in material and workmanship for FIVE (5) YEARS FROM DATE OF PURCHASE, provided there has been normal use and proper maintenance. This warranty applies to the original purchaser only. All remedies under this warranty are limited to the repair replacement of the product itself, or the repair or replacement of any component part thereof, found by the factory to be defective within the time period specified. The decision to repair or replace is wholly within the discretion of the manufacturer.

This warranty specifically excludes labor. If you have a warranty claim, first you must call our factory at the number below for instructions. You must retain proof of purchase and submit a copy with any items returned for warranty work. Upon completion of warranty work, if any, we will return the repaired or replaced item or items to you freight prepaid. Damage to our products caused by accidents, fire, vandalism, negligence, misinstallation, misuse, acts by nature or by defective parts not manufactured by us, is not covered under this warranty.

ANY IMPLIED WARRANTIES OF MERCHANTABILITY AND/OR FITNESS FOR A PARTICULAR PURPOSE CREATED HEREBY ARE LIMITED IN DURATION TO THE SAME DURATION AND SCOPE AS THE EXPRESS WRITTEN WARRANTY. OUR COMPANY SHALL NOT BE LIABLE FOR ANY INCIDENTAL OR CONSEQUENTIAL DAMAGE.

Some states do not allow limitations on how long an implied warranty lasts, or the exclusion or limitation of incidental or consequential damages, so the above limitations or exclusions may not apply to you. This warranty gives you specific legal rights, and you may also have other rights that vary from state to state.

FOR WARRANTY ISSUES WITH THIS PRODUCT PLEASE CALL REALTRUCK TECH SUPPORT 1-888-983-2204

WARNING

Be sure to read and precisely follow the provided instructions when installing this product. Failure to do so could place the vehicle occupants in a potentially dangerous situation. After installing or reinstalling, re-check to insure that the product is properly installed.

The material that your product is made from can be recycled. Please also consider recycling the packaging that your product came in.