Power Step

APPLICATION	MODEL YEAR	PART NUMBER
Jeep Wrangler JL 4Dr *(For Gas, Diesel and 4XE models)* *(Also includes Rubicon 392)*	2018- 2026	75132-01A

INSTALLATION GUIDE

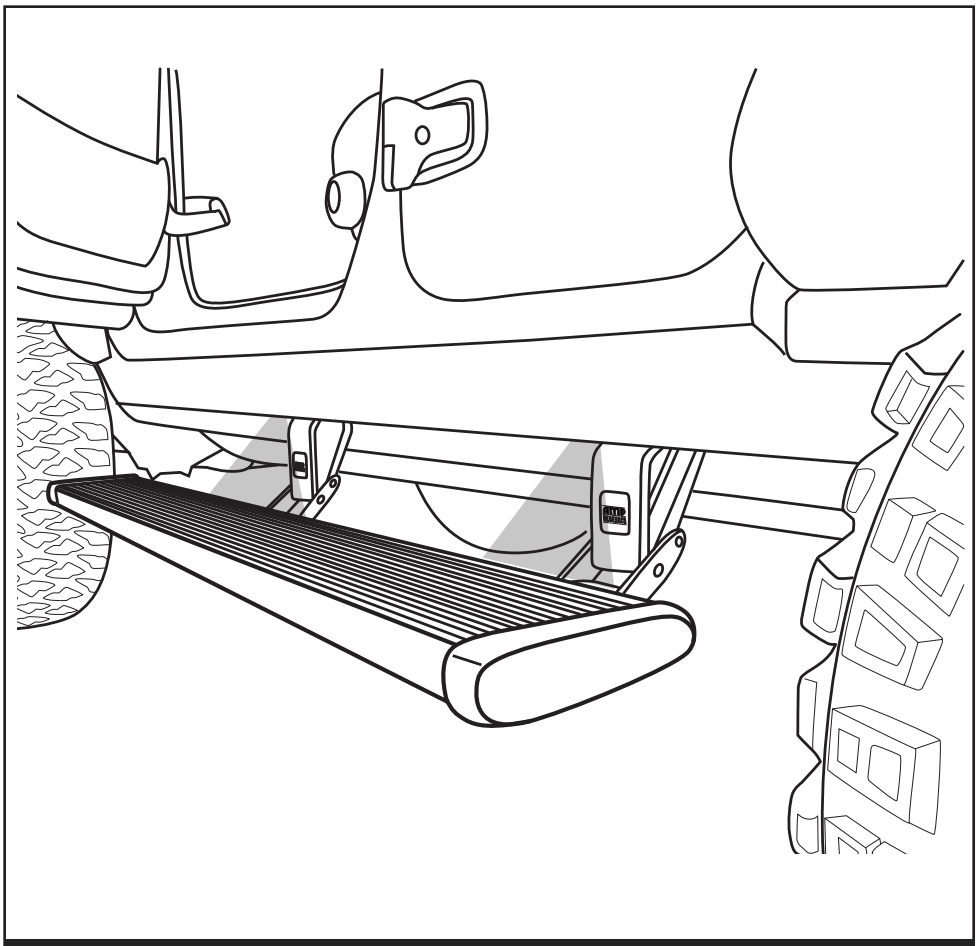

with NEW Brose 2 Motor Design

INSTALLATION TIME

3-5 Hours

Professional installation recommended

SKILL LEVEL

1 2 3 4

4= Experienced

TOOLS REQUIRED

- ❑ Safety goggles
- ❑ Measuring tape
- ❑ 10 mm socket
- ❑ 13 mm socket
- ❑ 1/2” socket
- ❑ Ratchet wrench and extension
- ❑ Wire crimpers
- ❑ Wire stripper / cutter
- ❑ 3/16” hex key wrench (allen wrench)
- ❑ 4mm hex key wrench (allen wrench)
- ❑ Electrical tape
- ❑ Weather proof caulking (silicone sealer)
- ❑ Silicone spray
- ❑ Drill
- ❑ Drill bit 3/16”
- ❑ Fish tape or stiff piece of wire
- ❑ T-25 Torx Driver

WARRANTY

5-Year Limited Warranty

REALTRUCK TECH SUPPORT 1-888-983-2204 (Press 2) Monday - Friday, 8:00 AM - 5:00 PM EST

Designed and manufactured by RealTruck AMP Research® • Made in Mexico
Patent Protected. Please see our product site for applicable patents. www.realtruck.com/b/amp-research/
© RealTruck Group, Inc., 2026 • Five-year limited warranty. • Professional installation is recommended.

The motors must be attached to the linkage before mounting to vehicle.

EXPLODED VIEW

- Motor
- Fasteners

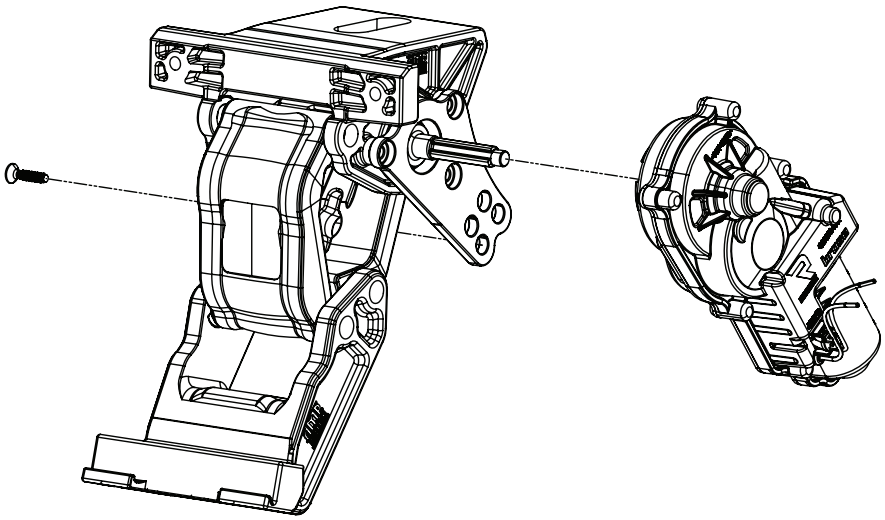

Motor Plate Install Orientation

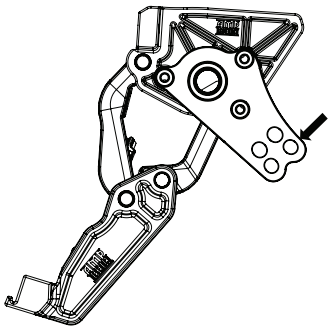

CAUTION: HANDLE WITH CARE.

To ensure our customers receive all components with full integrity, we pack the motors separate from their Linkage assemblies. This requires that the installer position and fasten the motor before continuing with the install. Please follow the instructions below and handle the assembly carefully.

CAUTION: Dropping the assembly or any excessive impact MAY cause damage to the motor.

Instructions:
1. Slide motor on to drive shaft.
2. Rotate motor by hand while on the shaft to postion it to the mounting plate (orientation as shown above).
3. Fasten motor to the motor mounting plate using supplied PT Screw with T-25 Torx driver. Tighten screw to 60 in-lbs (6.8 N·m). **Do not over torque.**

Note:
The motor and shaft have only three possible positions. Depending on the current position of the motor, motor/shaft and the orientation of the motor plate, it may be necessary to power it in order to align it correctly with the linkage and shaft during assembly so that the motor can be mounted to the mounting plate.
To do this:

1. Power up the motor.
2. Open the door to allow the motor to spin and reposition.
3. Once the motor times out, remove the fuse.
4. Assemble the motor onto the shaft.
5. Fasten motor to mounting plate.

This process may need to be repeated to achieve the correct alignment.

PARTS LIST AND HARDWARE IDENTIFICATION

End cap left (x1)
End cap right (x1)
T-nut insert (x2)
Socket cap screw (x2)
Nut plate (x2)

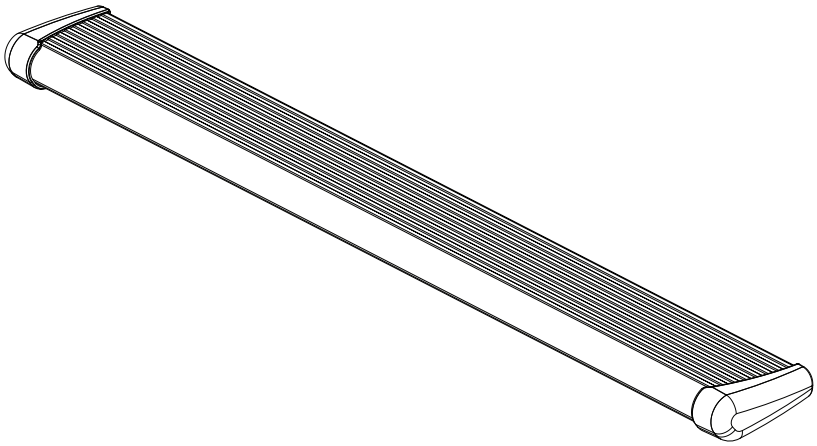

1 x2
Step assembly

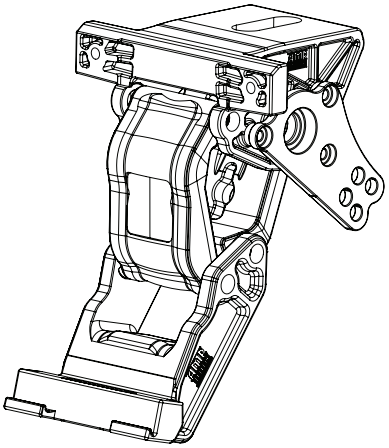

2 x2
Motor Linkage assembly

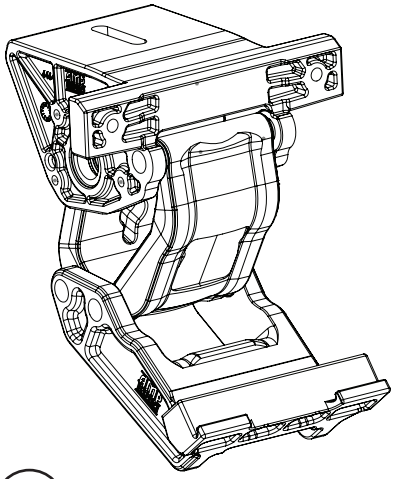

3 x2
Idler Linkage assembly

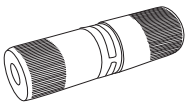

4 x4
Posi-Tite®

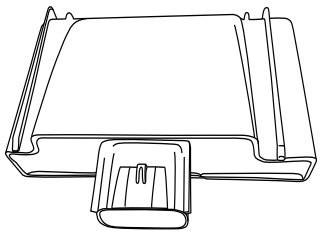

5
Controller SSA

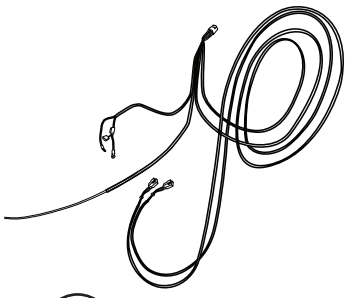

6
Wire harness

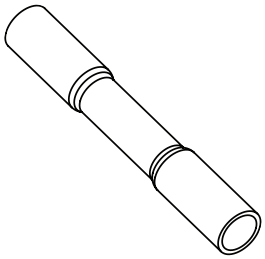

7 x8
Butt Connector

PARTS LIST AND HARDWARE IDENTIFICATION

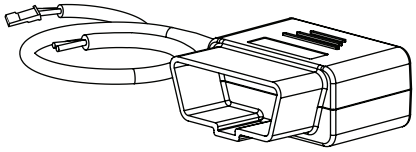

8
OBD Module

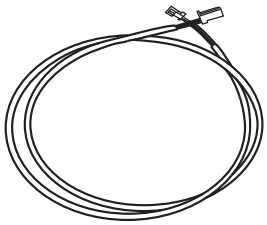

9
OBD Module extension

10 x2
Posi-Lock®

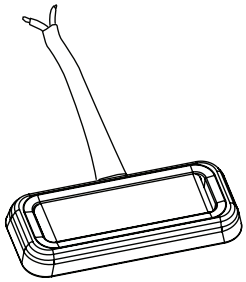

11 x4
LED Lamp

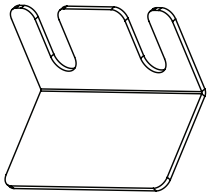

12 x2
Rear LED
Light Bracket

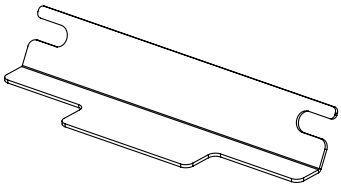

13 x2
Front LED
Light Bracket

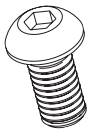

14 x8
M8 Button
Head Bolt

15 x8
Socket Cap
Screw

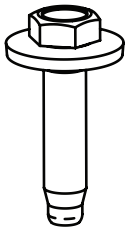

16 x4
M8 Hex Bolt w
Conical washer

17 x8
Washer

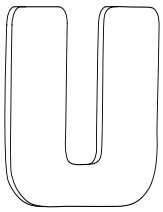

18 x2
Shim Spacer

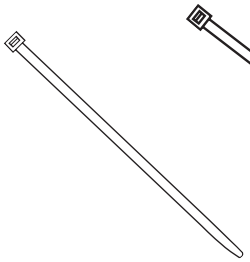

19 x20
Cable tie (7”)

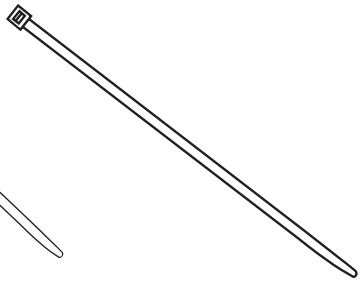

20 x2
Cable tie (11”)

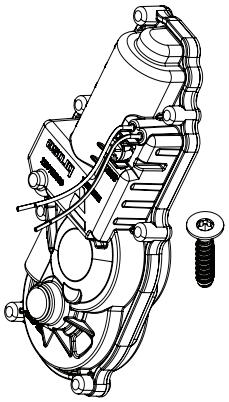

21 x2
Motor Assembly kit

Mounting positions circled for front and rear linkage mounting points. Passenger side shown.

Passenger Side shown.

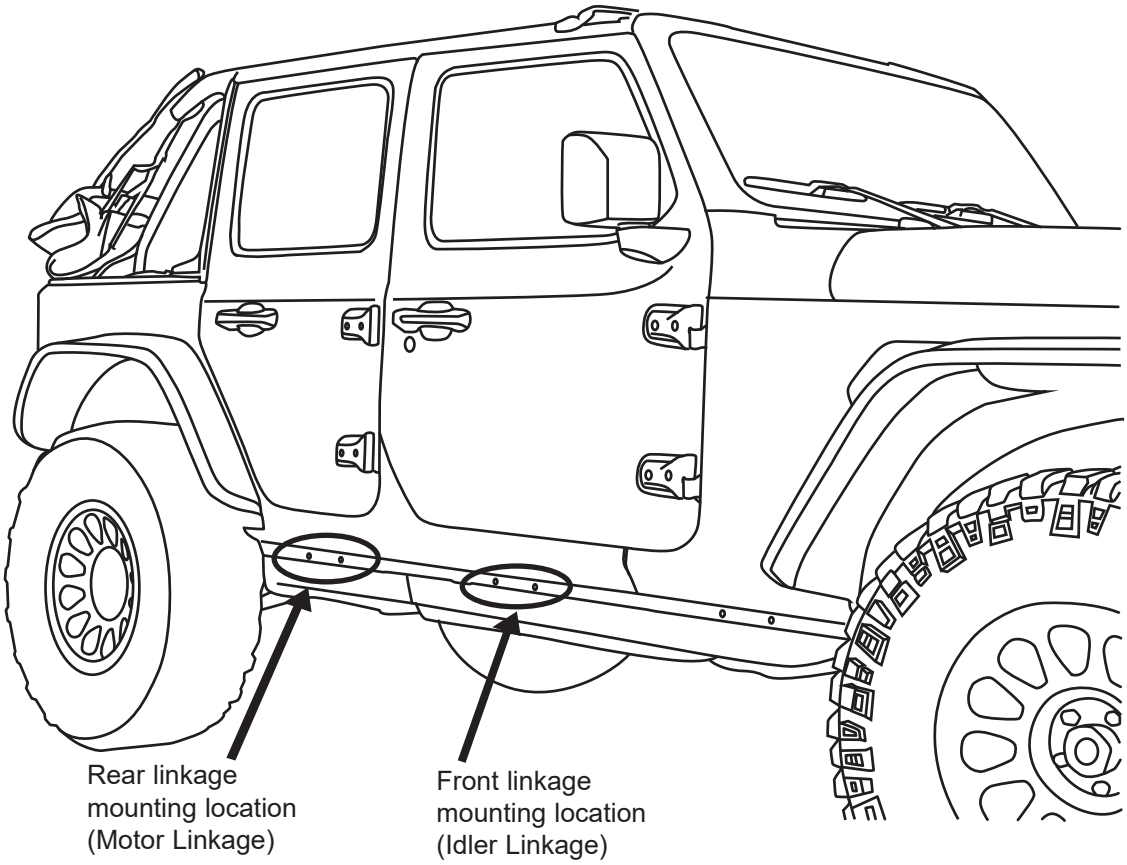

1

Install Rear Drive Linkage:
Locate rear most mounting hole set. Using supplied button head screws(14) and washers(17) assemble linkage to pinch weld. Before tightening, slide Light mounting bracket(12) in forward mounting hole. Next use supplied hex bolt with conical washer(17) through bottom threaded insert in body. Leave bolts loose. Repeat linkage installation for passenger side.

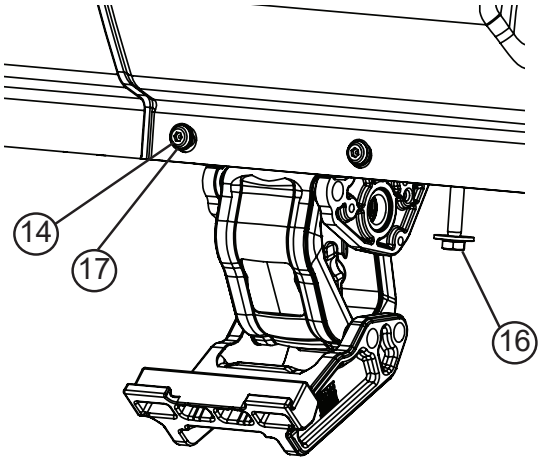

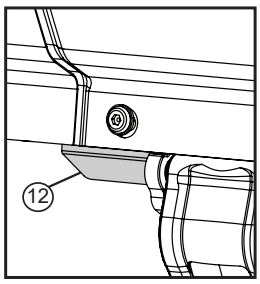

Note: When installing the light bracket, the nut plate insert with the raised portion faces the bolt. Motor goes on right side of linkage for both passenger and driver side.

2

Install Front Idler Linkage: Locate next set of mounting holes forward. Using supplied button head screws(14) and washers(17) assemble linkage to pinch weld. Before tightening, slide Light mounting bracket(13) in forward mounting hole. Next use supplied hex bolt with conical washer(16) and shim (18) through bottom threaded insert in body. Leave bolts loose. Repeat linkage installation on passenger side.

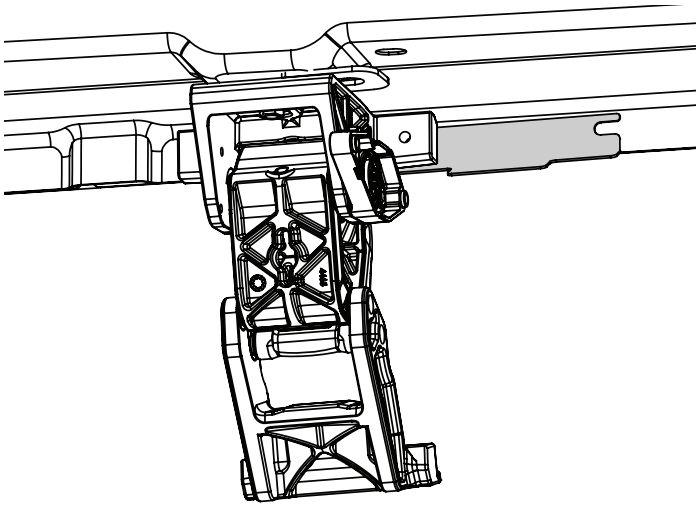

3 **Note:** When installing the light bracket, the nut plate insert with the raised portion faces the bolt.

Mount step extrusion to linkage assemblies. Line up T-nuts in step assembly with slots in lower mounts of linkage assemblies. Fasten loosely to allow for adjustments. Line up step extrusion with rear fender well. Tighten and torque 4 socket cap screws(15) with 3/16” allen wrench. Torque to 10 ft-lbs. (13.5N-m)

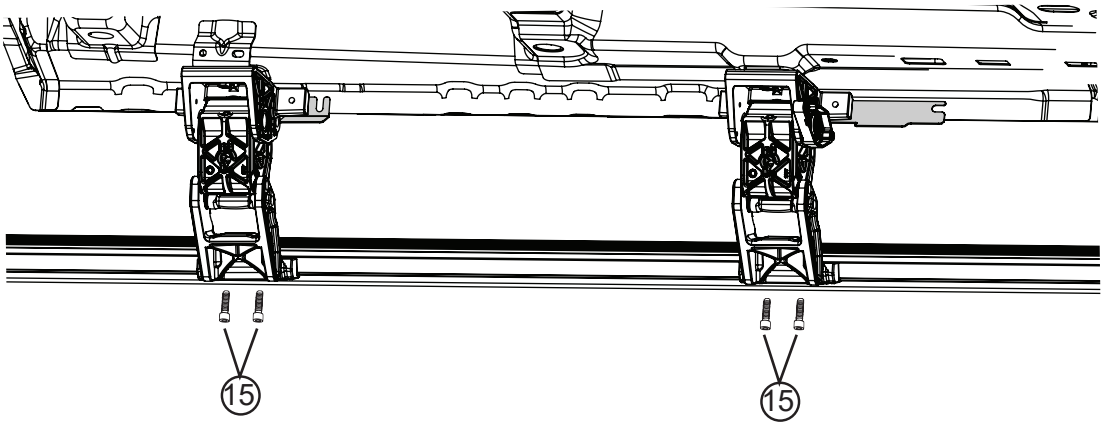

4

Torque button head screws from step 1 and 2 to 16ft lbs (22N-m). Then, torque hex bolts from step 1 and 2 to 16ft lbs (22N-m).

5

Gas Models ONLY follow steps 6 and 7 then go to step 12.

Includes Rubicon 392 models.

Diesel models go to step 8.

4XE models go to step 10.

GAS MODELS ONLY: Remove fuse from Power Step Wire Harness. Prepare large tie-wraps (20) for mounting Power Step Controller (5). Loosely loop tie-wraps around large bundle of wires behind battery in engine compartment. Insert controller into tie-wrap loops and cinch down securely. The tie-wraps should cinch down into channels on controller surface. Connect power leads from Controller, Red to positive battery terminal and Black to the vehicle body ground as shown.

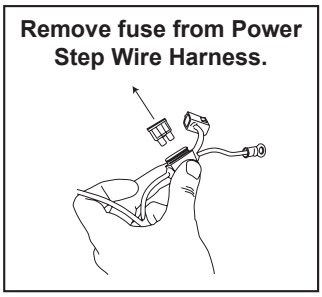

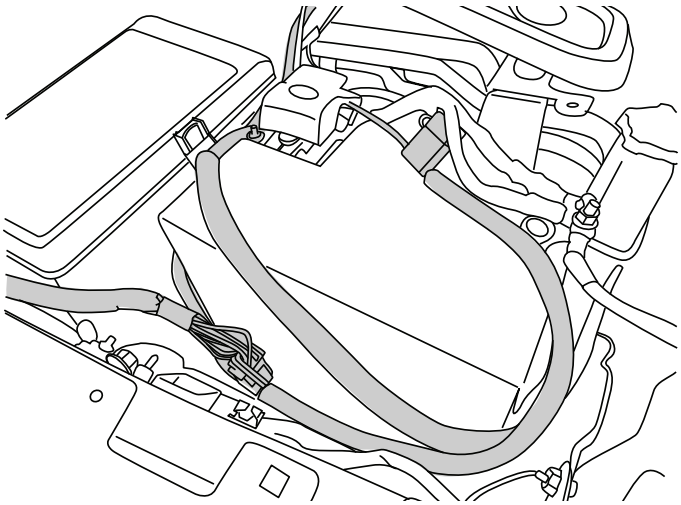

6

GAS MODELS ONLY: Route the two Wire Harness legs down over the wheel wells toward Motor Linkages, long leg across to the driver side. Secure harness with tie wraps (19).

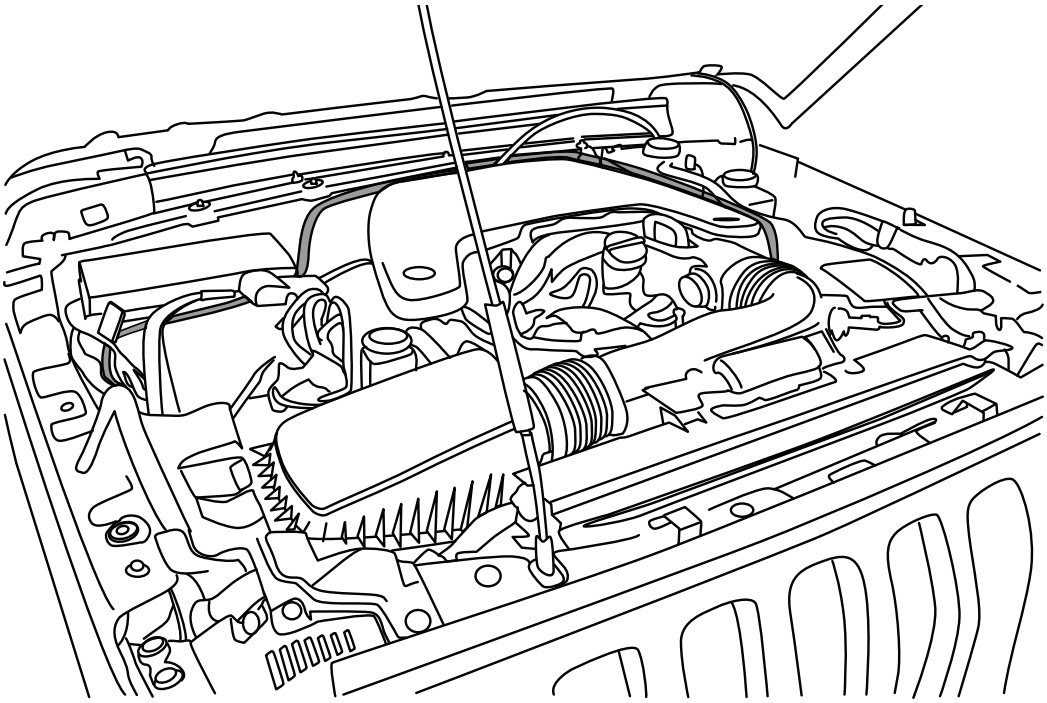

7

Diesel models ONLY follow steps 8 and 9 then go to step 12.

DIESEL MODELS ONLY: Remove fuse from Power Step Wire Harness. Prepare large tie-wraps(20) for mounting Power Step Controller (5). Loosely loop tie-wraps (19) around large bundle of wires behind battery in engine compartment. Insert controller into tie-wrap loops and cinch down securely. The tie-wraps should cinch down into channels on controller surface. Connect power leads from Controller, Red to positive battery terminal and Black to the vehicle body ground as shown.

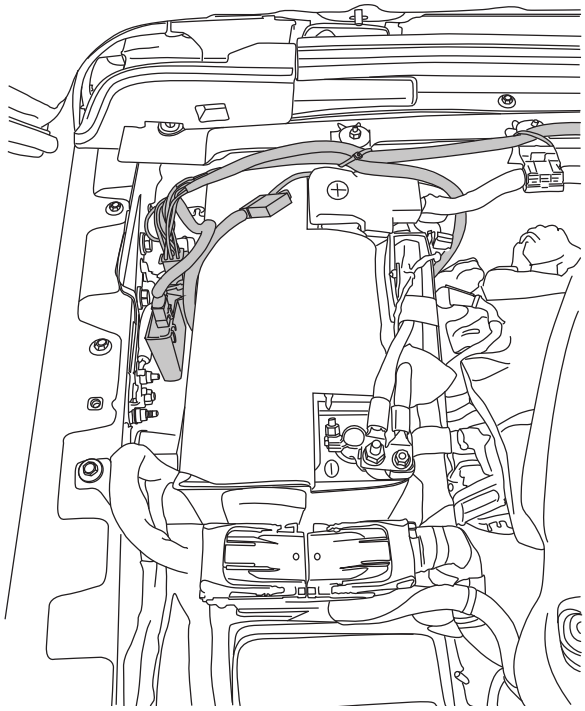

Remove fuse from Power Step Wire Harness.

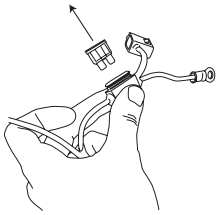

8

DIESEL MODELS ONLY: Route longer harness Leg across to driver side . Secure harness to cowl with tie wraps (19) to keep harness away from hot engine components. Next route harness under Coolant recovery tank then down and to the outside of the frame rails. Route shorter harness leg down the passenger side ensuring the harness is run to the outside of the frame rails and away from any hot exhaust components. Secure harness with tie wraps (19).

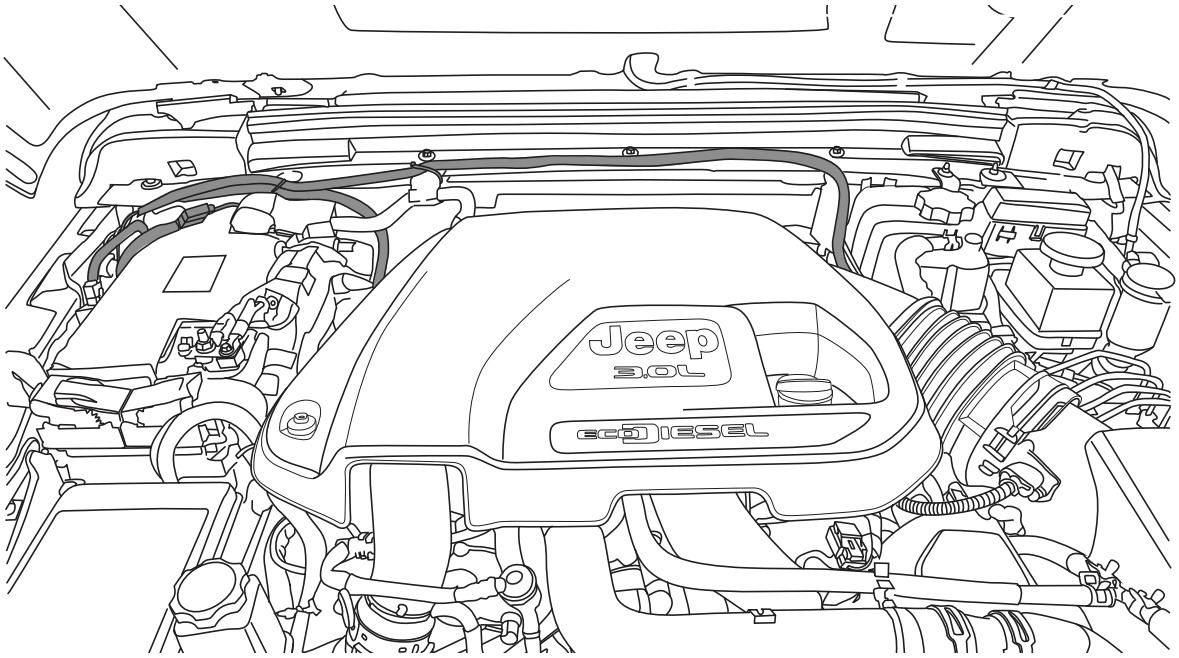

9

4XE Models ONLY follow steps 10 and 11 then proceed to step 12.

4XE MODELS ONLY: Remove fuse from Power Step Wire Harness. Prepare large tie-wraps (20) for mounting Power Step Controller (5). Loosely loop tie-wraps around large bundle of wires behind battery in engine compartment. Insert controller into tie-wrap loops and cinch down securely. The tie-wraps should cinch down into channels on controller surface. Connect power leads from Controller, Red to positive battery terminal and Black to the vehicle body ground as shown.

Remove fuse from Power Step Wire Harness.

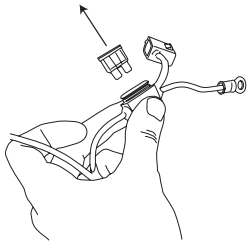

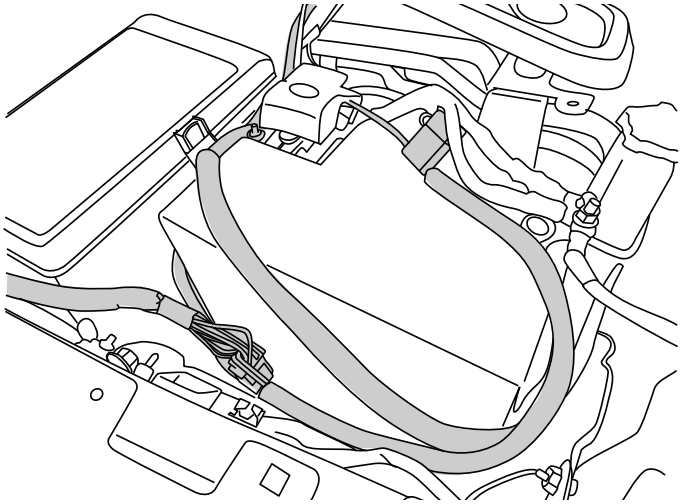

10

4XE MODELS ONLY: Route longer harness Leg across to driver side. Secure harness to cowl with tie wraps (19) to keep harness away from hot engine components. Next route harness under Coolant recovery tank then down and to the outside of the frame rails. Route shorter harness leg down the passenger side ensuring the harness is run to the outside of the frame rails and away from any hot exhaust components. Secure harness with tie wraps (19).

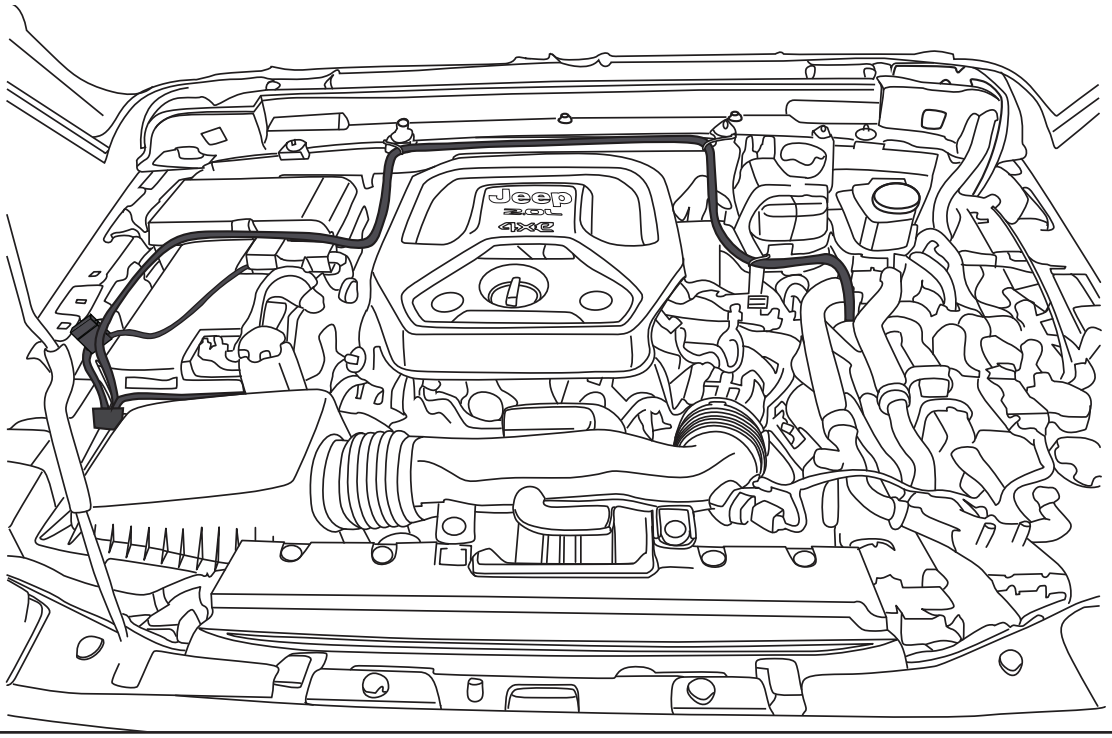

11

Press and release glove box safety tab to fully open and remove glove box, next, release glox box dampener located on the left side.

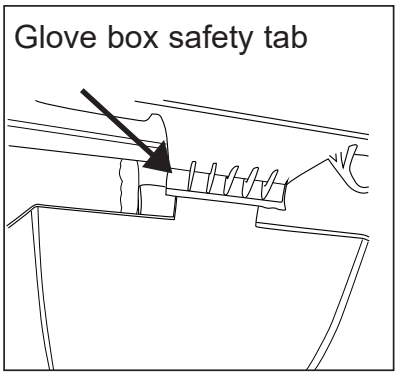

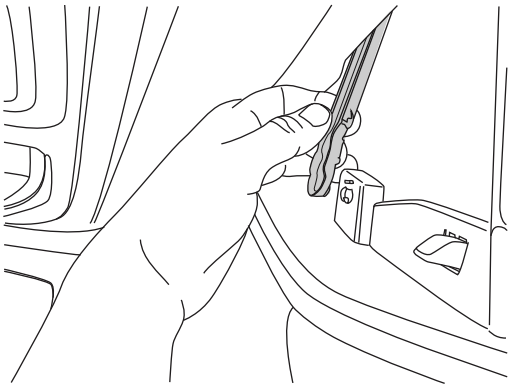

12

Carefully leave glove box hanging to expose plugs behind it.

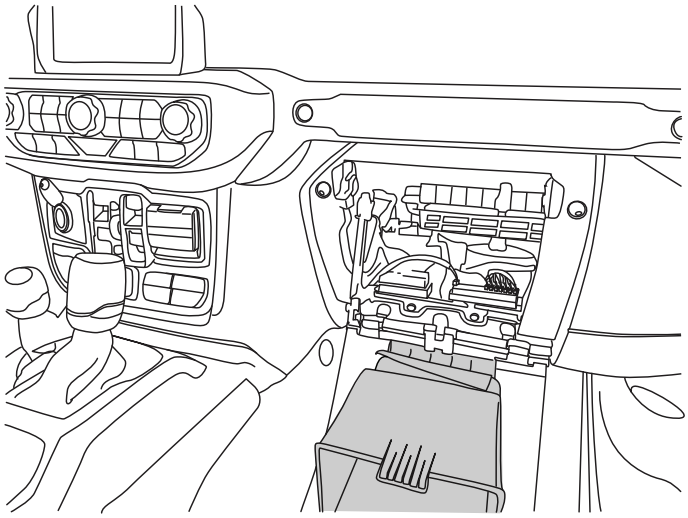

13

Locate white block (on right side) and plug the 2 pin connector from the OBD module extension (8) into that port.

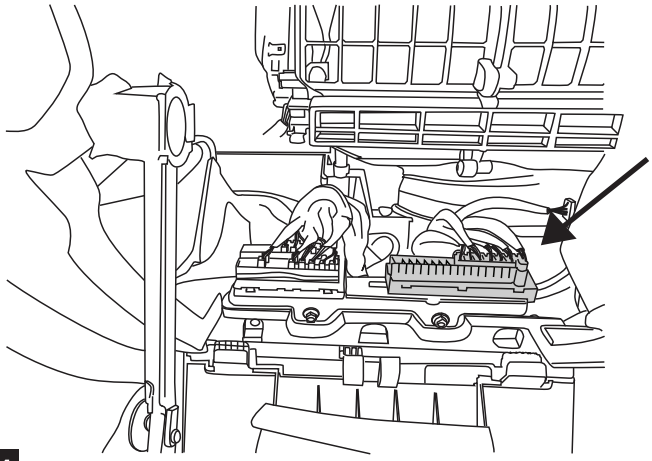

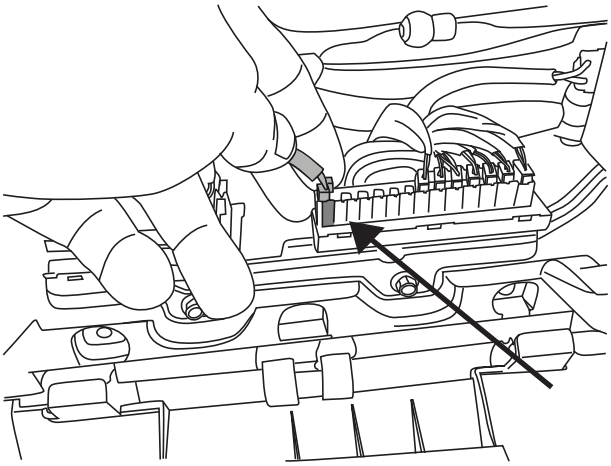

14

Pull back carpet on passenger side on the top side of middle console and then use a hard piece of wire or fish tape to route OBD II Extension (9) behind middle console. Tape open end of extension to the tube and push the tube through middle console.

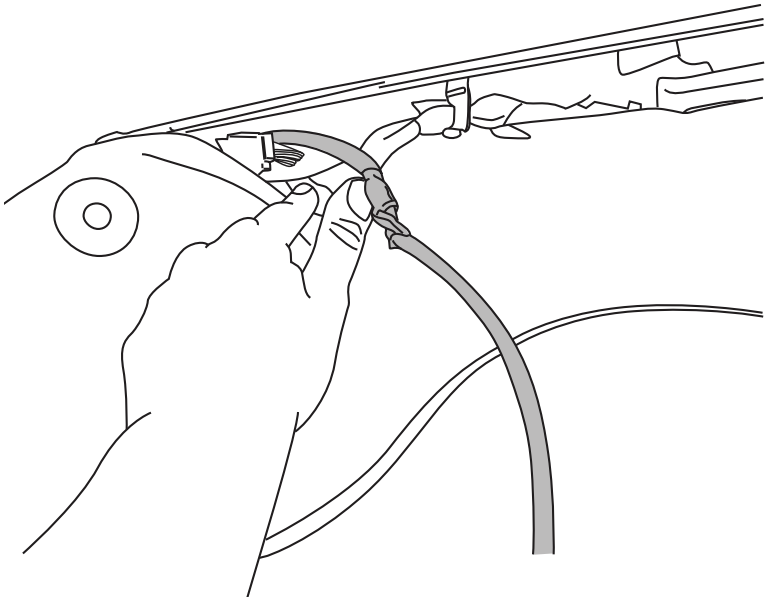

15

From driver side, pull the wire that was pushed through from passenger side.

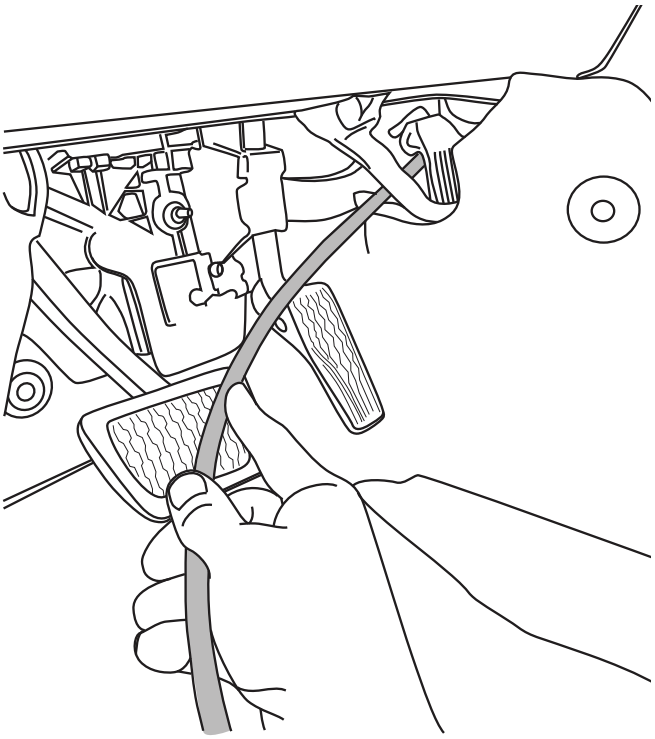

16

Remove OBD II Extension (9) from hard piece of wire and plug extension wire to OBD module (8) wire.

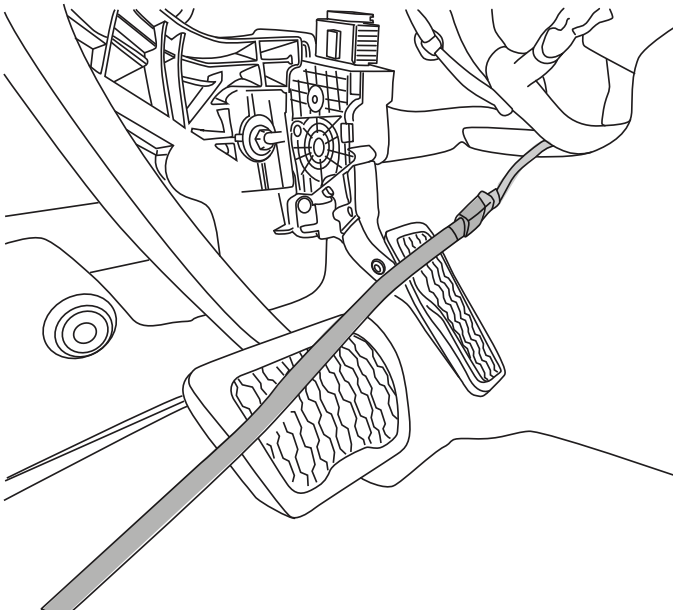

17

Route trigger wire through firewall. Locate round plastic plug on firewall to the left of the brake assembly. Drill small hole using a 3/16 drill bit. Route trigger wire through firewall. Use supplied posi-lock® (10) to connect yellow wire to OBD Module (8). Apply silicone to seal off firewall.

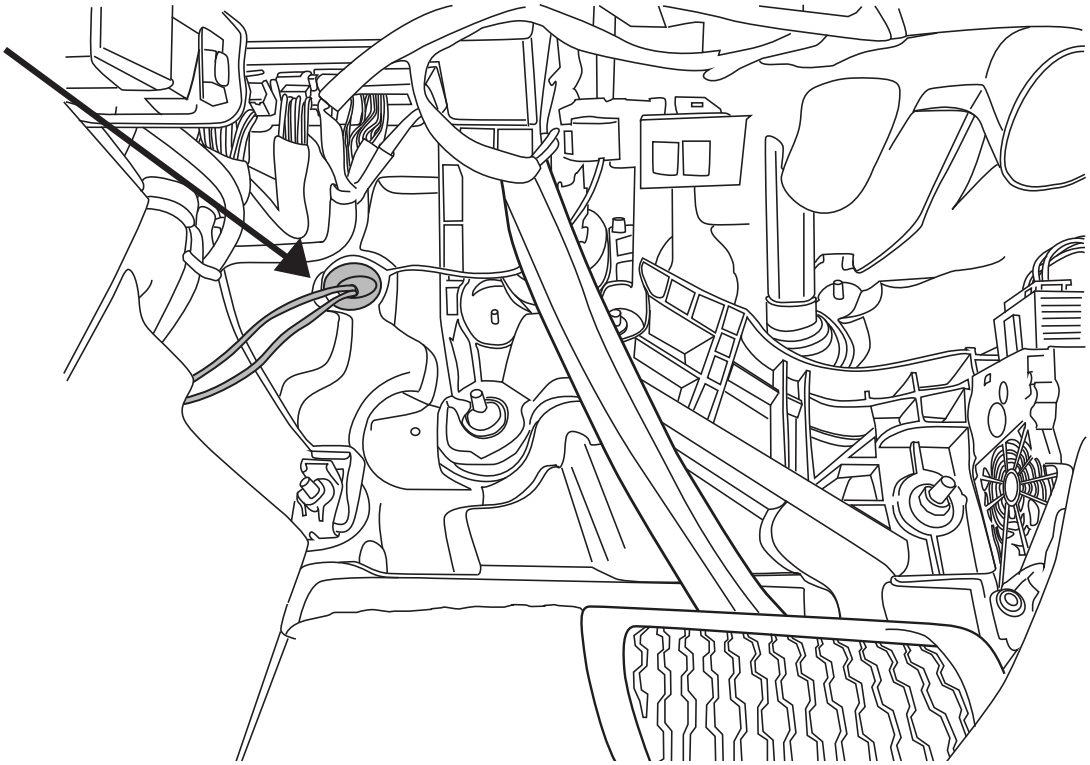

18

Use cable ties to secure all wires in place. Plug in OBD Module.

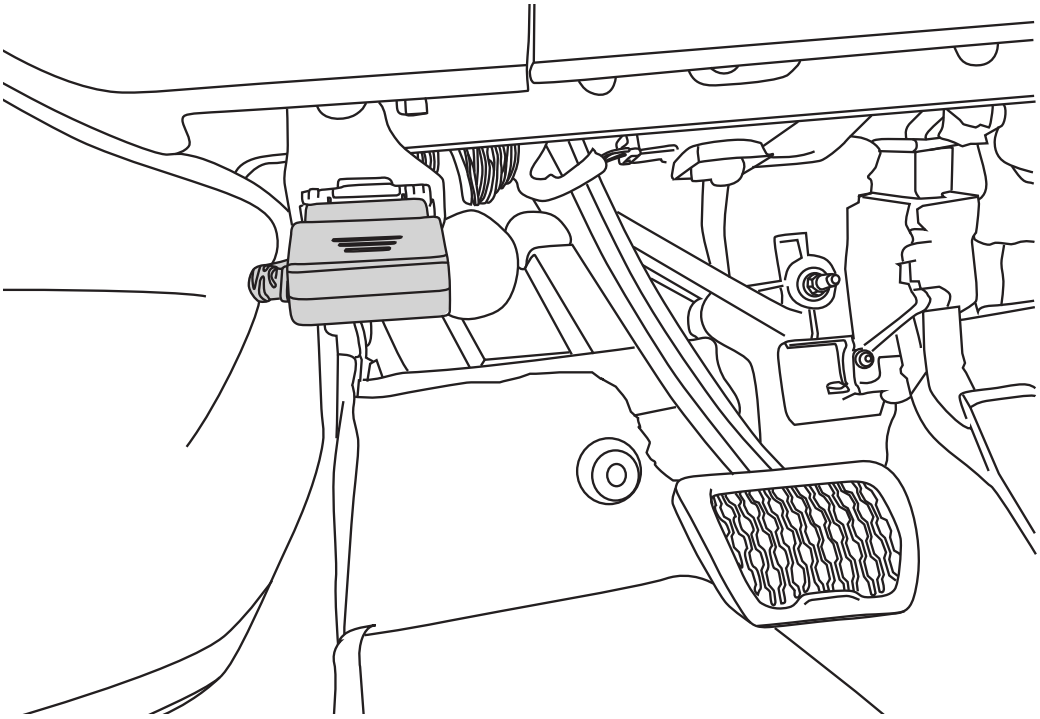

19

OBD II install: Use Supplied Posi-Lock™ connectors to attach the Plug and Play Module to the Harness. Attach matching colors on the harness to the wires on the module. Plug in module to OBD II port on the vehicle. Secure harness with supplied tie wraps. ***Note: If the OBD II pass thru harness (76404-01A) was purchased see install sheet supplied in packaging. The pass through harness allows for an open port for other accessories. See below for a brief description.***

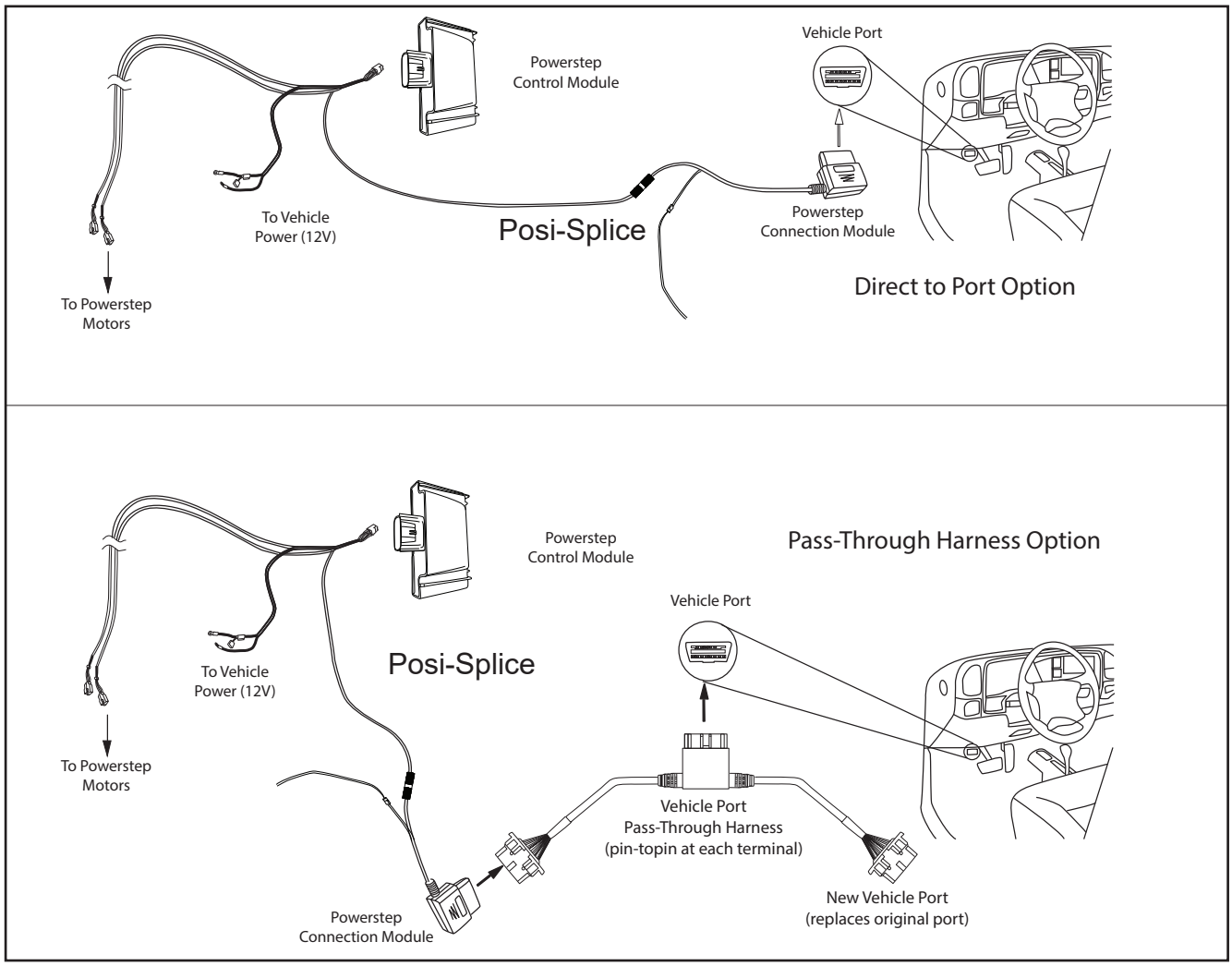

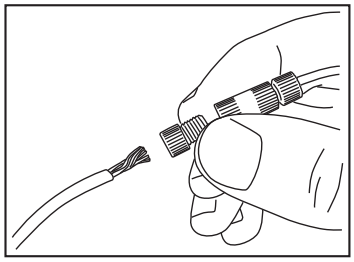

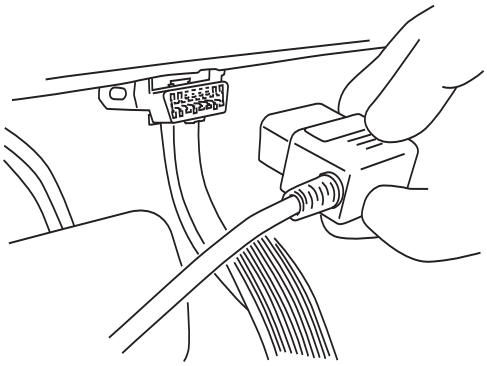

On driver side, run wire harness leg downand along underside of the vehicle floor and frame to Rear Drive Linkage. Connect the wire harness to the motor. Follow steps below for wire connection instructions. Then, proceed with securing harness with tie wraps.

Repeat step on passenger side.

Motor spinning the shaft clockwise direction:

1) First, install one Posi-Tite® (4) onto white wire from the motor. See image on right.

2) Install second Posi-Tite® (4) onto orange wire from motor. See image on right.

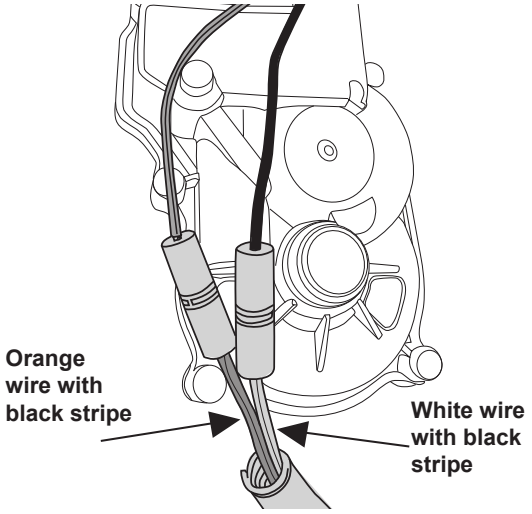

3) Next, connect the white wire with black stripe from the wire harness to the other end of the Posi-Tite® (4) that is connected to the all white wire from first step above.

4) Connect the Posi-Tite® (4) the orange wire from the motor with the orange with black stripe wire from the harness.

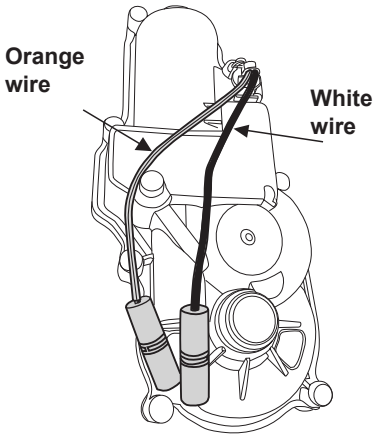

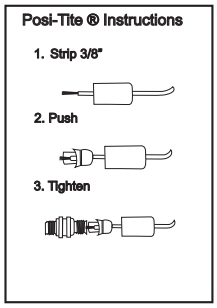

21

Affix LED lamp (11) to LED Bracket (12 & 13) (brackets previously installed in step 2 and 3).

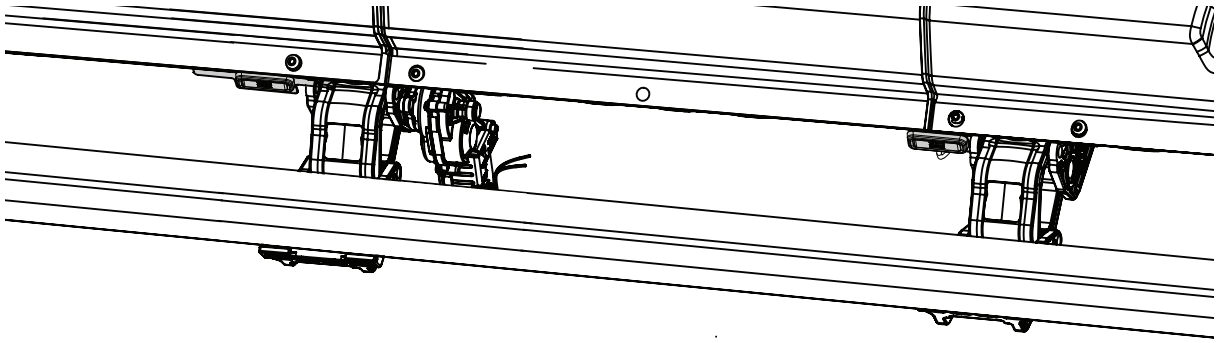

22

Using supplied butt connectors (7), connect the lamp wires. Red to Red, Black to Black. Once Crimped use heat gun to shrink tube. Close and wrap conduit with electrical tape. Secure all loose wires with cable ties. Pull lamp wires upward to avoid any wire snagging.

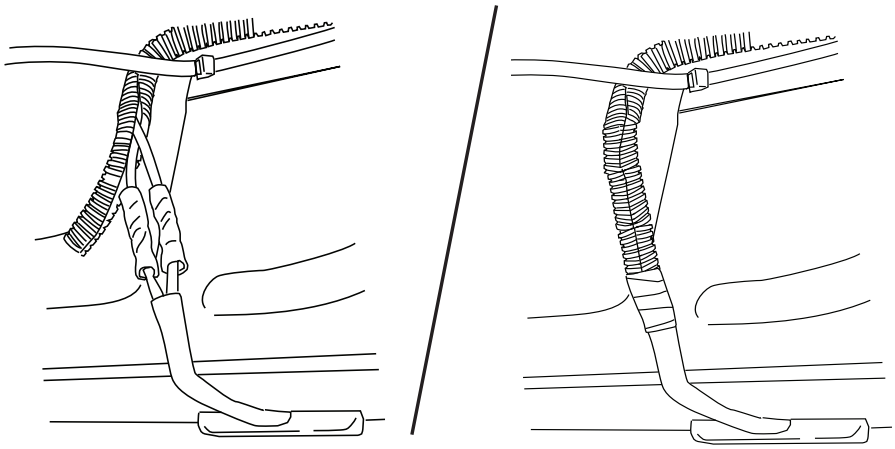

23

Reinstall Fuse from Powerstep Wire Harness. Check that all doors activate the Power Step and the LED Lights work when doors open and close. Reinstall any remaining trim panels.

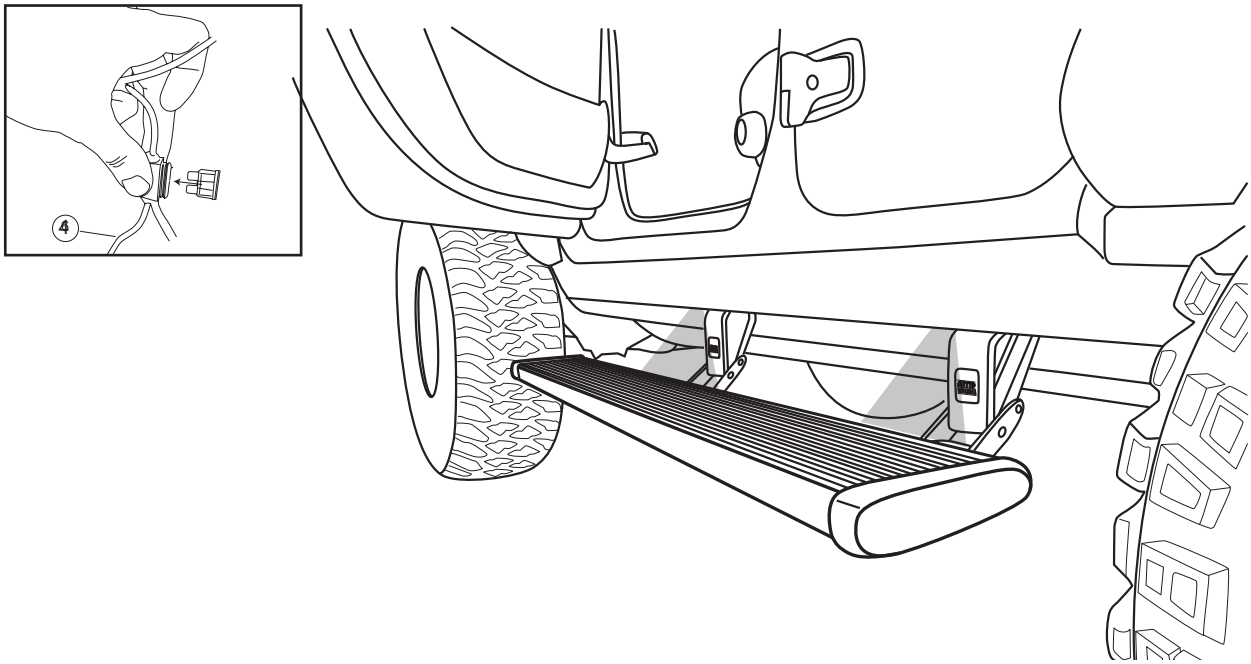

FINAL SYSTEM CHECK
Check that all doors activate the PowerStep and the LED lights work when doors open and close.
NORMAL OPERATION: When the doors open, PowerStep automatically deploys from under the vehicle. When the doors are closed, PowerStep will automatically return to the stowed/retracted position. ***Note that there is a 2-second delay before the PowerStep returns to the stowed/retracted position.***
CORRECT OPERATION OF LIGHTS: All four lamps will illuminate upon opening any door of vehicle. Lamps will stay on until restowing of both Power Steps or until 5 minutes has expired with the doors open. When the lights timeout after 5 minutes, they can be reillumintated by closing and opening any door of vehicle.

24

AMERICAN DESIGNED & ENGINEERED

Thank you for your recent RealTruck purchase.

REGISTER YOUR PRODUCT TODAY FOR FASTER SERVICE & PRODUCT UPDATES

Please visit:
https://realtruck.com/warranty-registration/
or scan the QR Code

SCAN ME

Product Registration Benefits:

• Ensure we have your purchase receipt and product info in our system which is required for warranty.

• Faster and easier access to customer service and tech support in the unlikely event you need warranty or product support.

• Registration helps us keep you up to date on product information and offers.

To view other RealTruck products that may be offered for your vehicle.

Please visit: www.realtruck.com

REALTRUCK AMP RESEARCH Power Step

Congratulations on your purchase of the genuine RealTruck / AMP Research PowerStep!
Here's what you should know...

POWER-DEPLOYABLE RUNNING BOARDS OPERATION: RealTruck / AMP Research PowerStep running boards automatically move when the doors are opened to assist entering and exiting the vehicle.

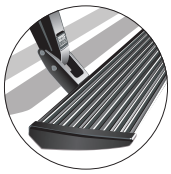

Automatic power deploy:
The running boards will extend down and out when the doors are opened.

Automatic power stow:
The running boards will return to the stowed position when the doors are closed. There will be a 2-second delay before the running boards move to the stowed position.

Automatic stop:
If an object is in the way of the moving running board, the running board will automatically stop. To reset, clear any obstruction, then simply open and close the door to resume normal operation.

Manually set in the deployed (OUT) position for access to the roof:
The running boards can be manually set in the deployed position by firmly holding the step down with your foot while at the same time closing the door. To resume normal operation, open and close the door.

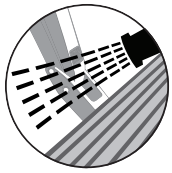

Maintenance: In adverse conditions, debris such as mud, dirt, and salt may become trapped in the running board mechanism, possibly leading to unwanted noise. If this occurs, manually set the running boards to the deployed position and flush the front and rear hinge arms with a high-pressure car wash wand. Avoid spraying the motors directly. After washing, apply silicone spray lubricant to the hinge pivot pins. Do not apply silicone, wax or protectants like Armor All® to the running board stepping surface.

Caution! Keep hands away when the running board is in motion.

5-YEAR LIMITED WARRANTY

RealTruck / AMP RESEARCH warrants this product to be free from defects in material and workmanship for FIVE (5) YEARS FROM DATE OF PURCHASE, provided there has been normal use and proper maintenance. This warranty applies to the original purchaser only. All remedies under this warranty are limited to the repair replacement of the product itself, or the repair or replacement of any component part thereof, found by the factory to be defective within the time period specified. The decision to repair or replace is wholly within the discretion of the manufacturer.

This warranty specifically excludes labor. If you have a warranty claim, first you must call our factory at the number below for instructions. You must retain proof of purchase and submit a copy with any items returned for warranty work. Upon completion of warranty work, if any, we will return the repaired or replaced item or items to you freight prepaid. Damage to our products caused by accidents, fire, vandalism, negligence, misinstallation, misuse, acts by nature or by defective parts not manufactured by us, is not covered under this warranty.

ANY IMPLIED WARRANTIES OF MERCHANTABILITY AND/OR FITNESS FOR A PARTICULAR PURPOSE CREATED HEREBY ARE LIMITED IN DURATION TO THE SAME DURATION AND SCOPE AS THE EXPRESS WRITTEN WARRANTY. OUR COMPANY SHALL NOT BE LIABLE FOR ANY INCIDENTAL OR CONSEQUENTIAL DAMAGE.

Some states do not allow limitations on how long an implied warranty lasts, or the exclusion or limitation of incidental or consequential damages, so the above limitations or exclusions may not apply to you. This warranty gives you specific legal rights, and you may also have other rights that vary from state to state.

FOR WARRANTY ISSUES WITH THIS PRODUCT PLEASE CALL REALTRUCK TECH SUPPORT 1-888-983-2204

WARNING

Be sure to read and precisely follow the provided instructions when installing this product. Failure to do so could place the vehicle occupants in a potentially dangerous situation. After installing or reinstalling, re-check to insure that the product is properly installed.