INSTALLATION INSTRUCTIONS

GRILL/ BRUSH GAURD PART #**3057/ 3057-2**
2005 FORD F250/F350 SUPERDUTY 2/4WD
2005 FORD EXCURSION 2/4WD

PARTS LIST

(1) FRONT BAR
(2) FRAME MOUNT BRACKETS
(6) 1/2” x 1 1/4” HEX HEAD BOLTS
(12) 1/2” FLAT WASHERS
(6) 1/2” HEX LOCK NUTS

PROCEDURE

1. Remove (2) factory bolts from each side of the front of vehicle. Attach passenger-side Frame Mount Bracket to vehicles front bumper and secure with the factory bolts that were just removed. Hand tighten. **Note:** You must install one bracket at a time to keep bumper from dropping too low.

2. Repeat for driver-side Frame Mount Bracket.

3. Line up the 3 holes on the lower portion of the Front Bar with the 3 holes on the inside of each of the Frame Mount Brackets and attach using (3) 1/2” x 1 ¼” hex bolts, (6) 1/2” flat washers, and (3) 1/2” hex lock nuts for each side. Hand tighten.

4. Align the left and right side of the Front Bar to the vehicle bumper, and when satisfied that the Bar is centered, tighten the (6) bolts supporting the Front Bar. The (4) factory Frame Mount Bracket bolts may now be tightened to complete installation.

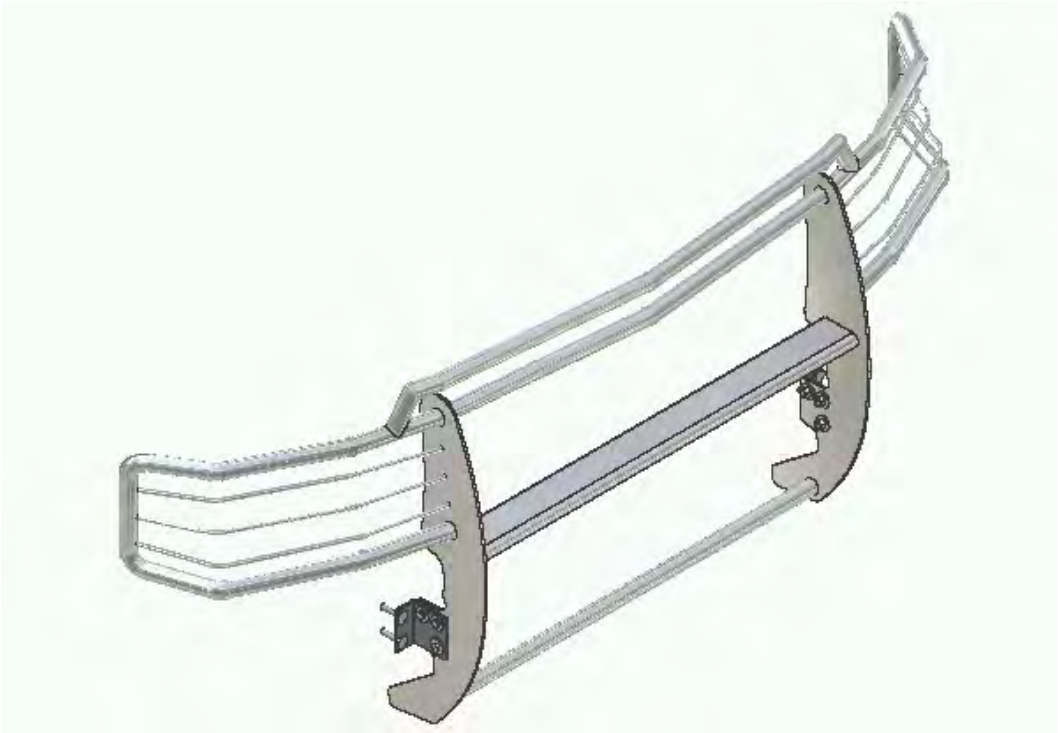

Figure 1.1 – Fully Assembled View

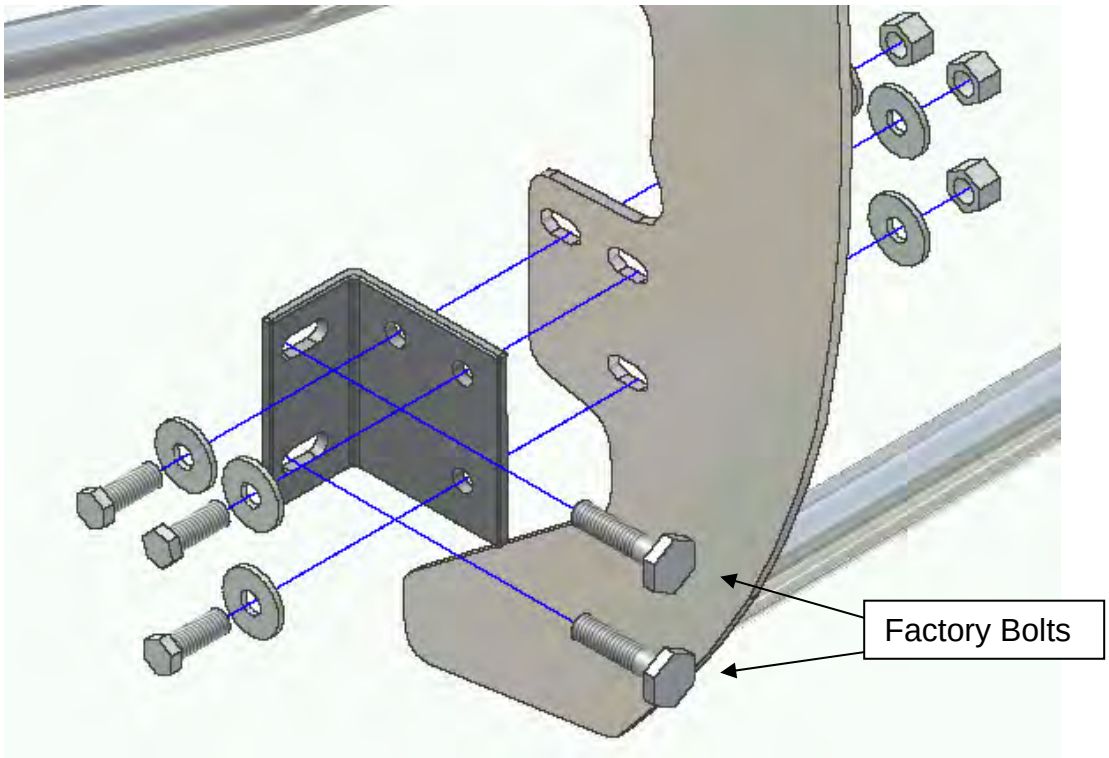

Figure 1.2 – Passenger-Side Mount Bracket