Installation Instructions
TrekStep™

Vehicle Application

- **Chevrolet Silverado / GMC Sierra 1500**
  Driver's and Passenger Side
  2014 – Current
  Part Number: 75307-15
- **Chevrolet Silverado / GMC Sierra 2500/3500**
  Driver's Side Only
  2014 – Current
  Part Number: 75307-15

www.bestop.com - We're here to help! Visit our web site and click on "Ask a Question". Click here for more Truck Accessories by Bestop.

INSTALLATION TIME	SKILL LEVEL
1/2 Hour	1 - Easy

TOOLS

Ratchet	Extension	Socket	Allen Wrench	Wrench
		18 mm, 22 mm	8 mm, 3/16"	22mm

Safety Glasses

WARNING Do not rely in any way on the components of this product to protect against injury or death in the event of an accident. Never operate the vehicle in excess of manuracturer's specifications.

WEAR SEAT BELTS AT ALL TIMES

Read and follow, precisely, all installation instructions provided when installing product. Failure to do so may result in a poor fit and could place occupants of the vehicle in a potentially dangerous situation.

TrekStep™ – Installation Instructions

Parts List and Hardware Identification

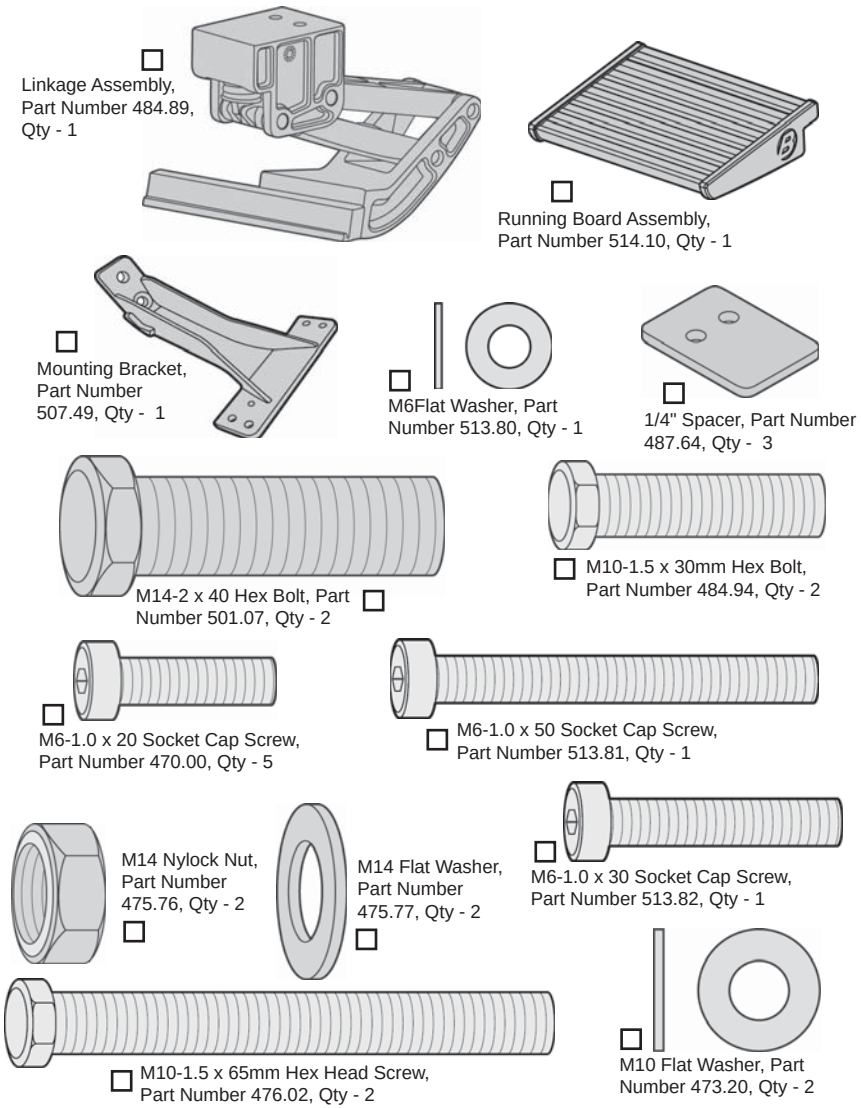

1 Locate Rear Bumper Attachment

Locate the rear bumper attachment point on the driver's side of the vehicle.

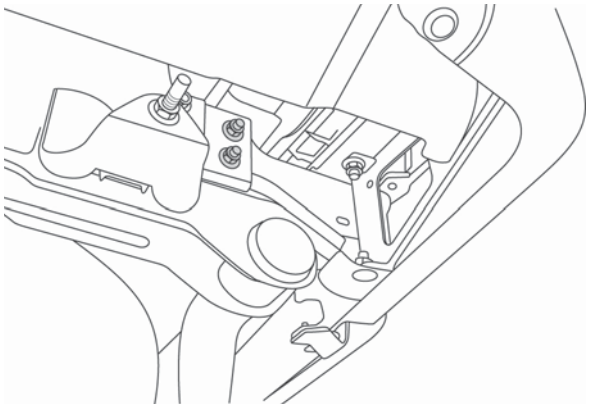

2 Remove Rear Bumper Fasteners

Completely remove and discard the bumper fasteners.

On some vehicles with towing packages, you will need to remove the bolts from the bumper bracket. Set these bolts aside to be reused later.

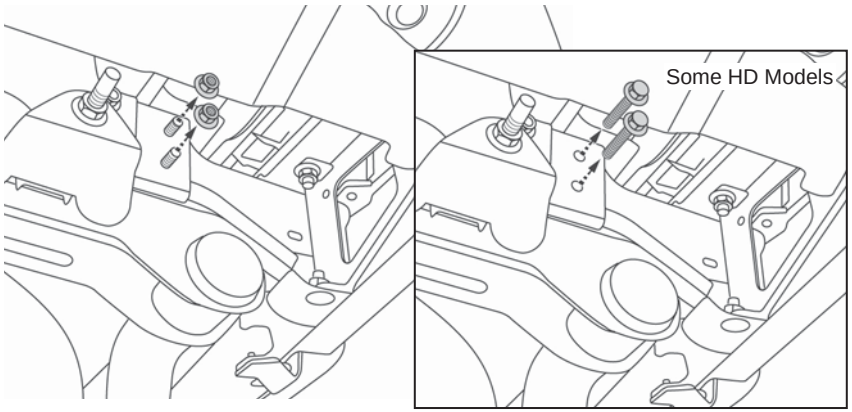

TrekStep™ – Installation Instructions

3 Assemble Linkage to Mounting Bracket

Use two (2) M10-1.5 x 30mm Hex Bolts, two (2) M10 Washers, and one M6-1.0 x 20 Socket Head Cap Screw to mount the Mounting Bracket to the Linkage.

NOTE Driver's side shown. Use mounting holes on opposite side for Passenger side.

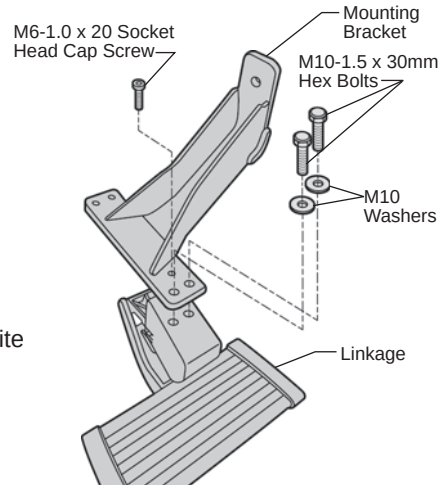

4 Install Linkage Assemblv

Use the M14 Hex Bolts to mount the Linkage to the frame. Secure the bolts to the frame with 9/16" Washers and M14 Nylock Nuts.

NOTE On some vehicles it may be necessary to loosen the bumper bracket to slide the M14 Hex Bolt through the top hole.

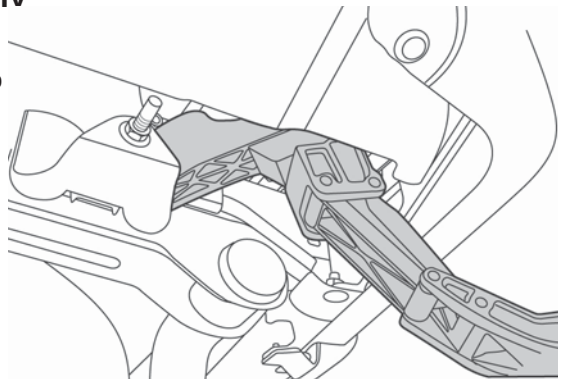

5 Install Step

Use the M6-1.0 x 20 Socket Head Cap Screws to mount the Step to the Linkage Assembly.

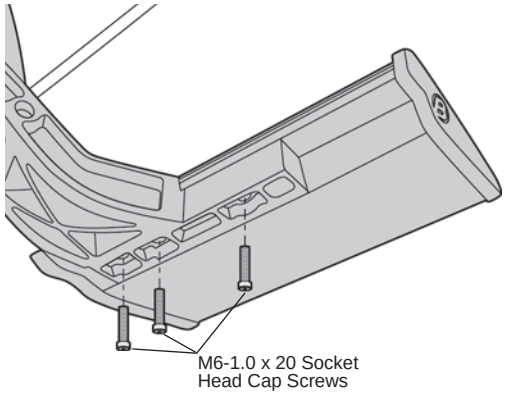

6 Adjust Step

Adjust the Step from side to side. Make sure to leave clearance for foot access to lower step. Tighten the allen head bolts.

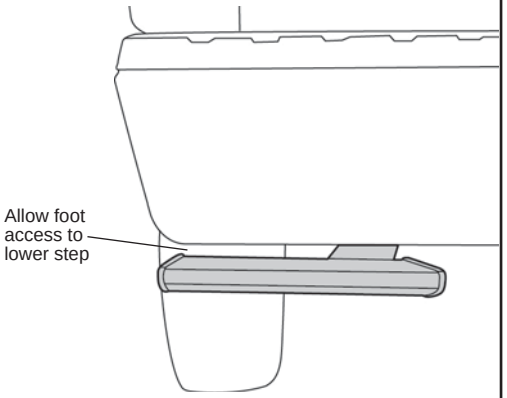

7 Adjust Step Height

If necessary to adjust the height, use the three (3) 1/4" Spacers provided. Remove the M10-1.5 x 30mm Hex Bolts installed in Step 3. Place the 1/4" Spacers between the Frame Mount and the Linkage. Install the M10-1.5 x 65mm Hex Bolts.

When the Step is in the desired position tighten all nuts.

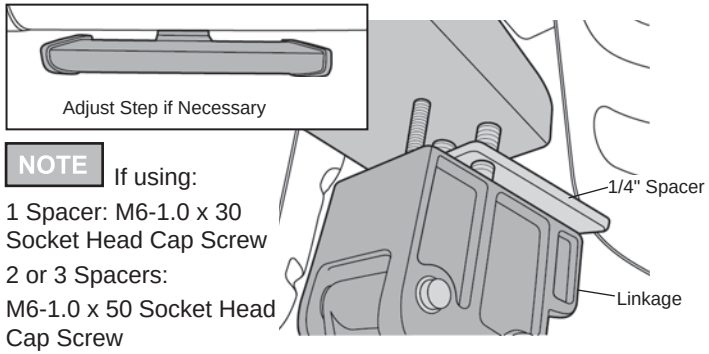

NOTE If using:

1 Spacer: M6-1.0 x 30 Socket Head Cap Screw

2 or 3 Spacers:

M6-1.0 x 50 Socket Head Cap Screw

Operation

- The TrekStep™ is foot operated and deploys and retracts with a nudge of your foot.
- To deploy, press down using your left foot, on the forward outside corner of the step pad.
- To retract, gently kick the underside of the step pad.
- Max Load Capacity: 300 lbs.
- Always use appropriate hand holds when stepping up to or down from your truck's cargo bed.

Care and Maintenance

The step pad surface and linkage arms should be washed with mild soap and water using a soft brush or sponge to dislodge any mud, dirt or accumulated road grime. Rinse with fresh water. After it is dry, lubricate the hinge with 3-IN-ONE Oil.
To prevent slipping, avoid applying waxes, lubricants or protectants like Armor All® to the step surface.

Attention!

TrekStep™ SHOULD ALWAYS BE STOWED IN THE RETRACTED POSITION WHEN DRIVING.

LIMITED WARRANTY

We warrant our product to be free from defects in material and workmanship, for the terms specified below, provided there has been normal use and proper maintenance. This warranty applies to the original purchaser only. All remedies under this warranty are limited to the repair or replacement of any item or items found by the factory to be defective within the time period specified. If you have a warranty claim, first you must call our factory at the number below for instructions. You must retain proof of purchase and submit a copy with any items returned for warranty work. Upon completion of warranty work, if any, we will return the repaired or replaced item or items to you freight prepaid. Damage to our products caused by accidents, fire, vandalism, negligence, misinstallation, misuse, Acts of God, or by defective parts not manufactured by us, is not covered under this warranty.

THE WARRANTY TIME PERIOD IS AS FOLLOWS FOR ALL TrekSteps™ MANUFACTURED BY OUR COMPANY: THREE YEARS / 36,000 MILES FROM DATE OF PURCHASE.

ANY IMPLIED WARRANTIES OF MERCHANTABILITY AND/OR FITNESS FOR A PARTICULAR PURPOSE CREATED HEREBY ARE LIMITED IN DURATION TO THE SAME DURATION AND SCOPE AS THE EXPRESS WRITTEN WARRANTY. OUR COMPANY SHALL NOT BE LIABLE FOR ANY INCIDENTAL OR CONSEQUENTIAL DAMAGE.

Some states do not allow limitations on how long an implied warranty lasts, or the exclusion or limitation of incidental or consequential damages, so the above limitations or exclusions may not apply to you. This warranty gives you specific legal rights, and you may also have other rights which vary from state to state.

For further information or request for warranty work, please contact:
Bestop Inc. Customer Service
Toll-Free: (800)845-3567
Main: (303)465-1755
E-mail: csbestop@Bestop.com
Website: www.Bestop.com