INSTALLATION INSTRUCTIONS

AUTOMOTIVE PRODUCTS, INC.

APPLICATION: 2006-07 DODGE RAM MEGA-CAB

STEP BAR ASSEMBLY

23-2900 23-2905

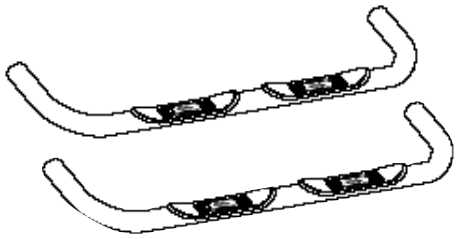

ITEM	QTY	CONTENTS	TOOLS
1	2	STEP BARS - DRIVER/PASSENGER (PINK SLEEVE)	3/4” SOCKET
2	2	FRONT MOUNTING BRACKETS - DF/PF	3/4” WRENCH
3	2	REAR MOUNTING BRACKETS - DR/PR	9/16” SOCKET
4	2	CENTER MOUNTING BRACKETS - DC/PC	9/16” WRENCH
5	2	FRONT SUPPORT STRAPS	18MM SOCKET
6	2	T-BOLT PLATES	19MM SOCKET
7	4	1/2-13 X 1.75” HEX HEAD BOLT	RATCHET
8	4	1/2” FLAT WASHER	TORQUE WRENCH
9	4	1/2” LOCK WASHER	
10	4	M12*120 HEX HEAD BOLT	
11	10	M12 FLAT WASHER (2 THIN)	
12	4	M12 LOCK WASHER	
13	2	M10*25 HEX HEAD BOLT	
14	4	M10 FLAT WASHERS	
15	10	M10 FLAT WASHERS (THIN)	
16	8	M10 LOCK WASHERS	
17	2	M10*40 HEX HEAD BOLT (with welded plate)	
18	6	M10 HEX NUT	
19	4	SPACER PLATES	

PRODUCT INSTALLATION:

1. Verify all parts & hardware are present. Read Instruction Sheets before installing.
2. Remove existing body mount bolts, do not discard rubber bushing. Install the front bracket to the front body mount by replacing the factory bolts with (1) M12*120mm bolt, M12 flat washer, and M12 lock washer. Place the ½” x 1.88 x 3/16” spacer plate between the bracket and the rubber bushing and hand tighten. Repeat Step #2 on opposite side. **SEE FIGURE 4**
3. Install the rear brackets in the same procedure as front brackets.
4. Install the T-Bolt plates through rocker panel as shown in figure #1 and attach center mounting brackets to the step bar using (1ea) M10*25 hex bolt / flat washer / lock washer. **FIGURE 1& 2**
5. Attach the front support strap to the side of the front brackets using (1) M10*25 hex head bolt (2) M10 flat washers (1) lock washer (1) Hex nut. Attach the other end of the support straps to the frame using the (1) M10*40 hex head bolt (with welded plate) (1) M12 flat washer (needs to go on the inside of the frame through large opening (1ea) M10 flat washer/lock washer/hex nut. Hand Tighten. **SEE FIGURE 3**
6. Attach the step bars to the front and rear brackets using (1) ½” - 13 x 1.75” bolt, (1) ½” flat washer/lock washer per bracket, and hand tighten. Torque M12 bolts first to 65 ft/lbs. and then tighten all remaining fasteners. **SEE FIGURE 3 & 4**
7. After all the bolts/flat washers/lock washers/hex nuts have been installed, make sure that all fasteners have been tightened.

PRODUCT SPECIFICATIONS:

Side Bars have a 300 lbs. weight capacity.

PRODUCT CARE:

Westin products have a high quality finish that must be cared for like any other exposed finish on the vehicle. Protect the finish with a non-abrasive automotive wax, (e.g. Pure Carnauba) on a regular basis. The use of any soap, polish or wax that contains an abrasive is detrimental, as the compounds scratch the finish and open it to corrosion.

Figure 1 - Center Bolt Plate & Bracket

Figure 2 - Center Bolt Plate & Bracket

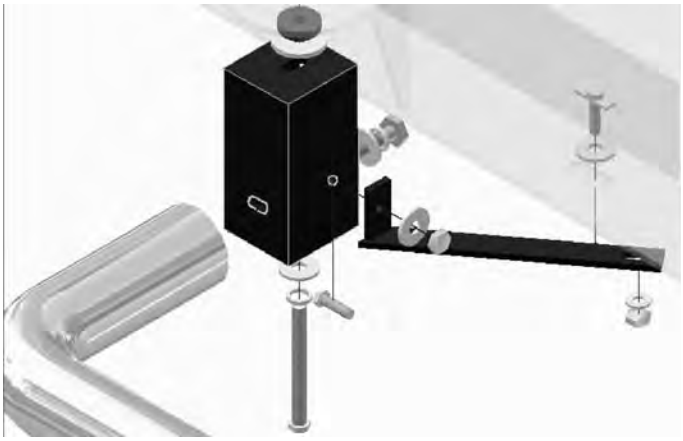

Figure 3 - Front Support Brace

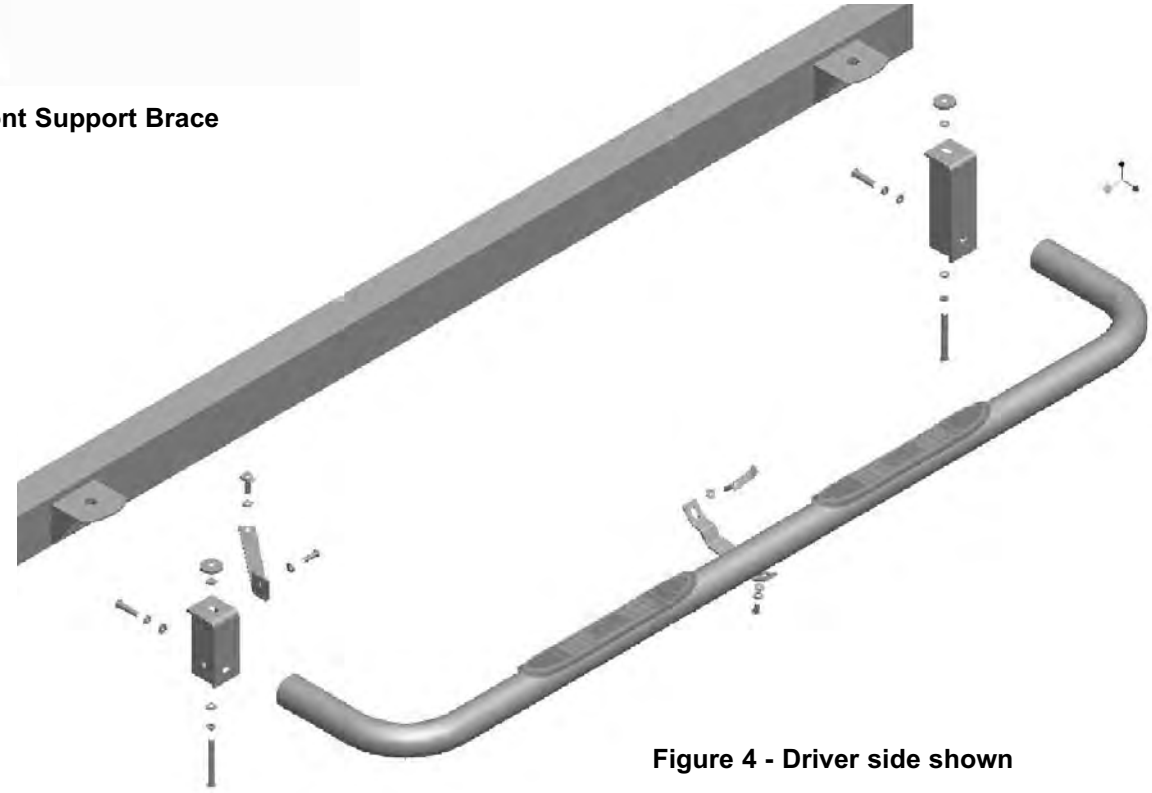

Figure 4 - Driver side shown

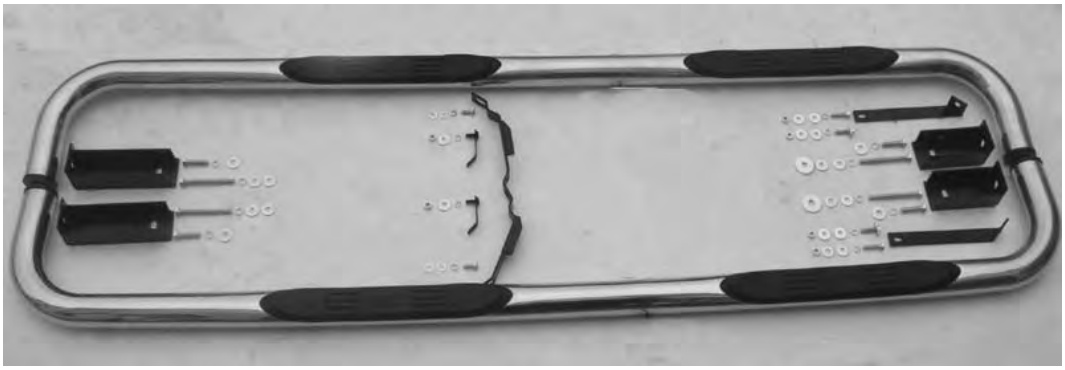

FULL ASSEMBLY -

DRIVER FRONT -

PASSENGER FRONT -

DRIVER REAR -

PASSENGER REAR -